MISR CONSULT
Envir. & Infrastructure Studies
Prof. Dr. Sameh Abdel-Gawad

مصـــر للإستشـــــارات
دراسات البيئة والبنية الأساسية
أ.د. سامح عبد الجواد

رقم الصادر: 40-LE-OUT-0049
التـــاريـــخ : ٢٠١٨/٠١/١٧م.

المشـــروع : محطة تنقية مياه الشرب طاقة ٥٠٠٠٠٠ م٣/يوم وخطي الطرد قطر ١٤٠٠ مم لتغذية مدينة نصر بـ (أبو عويقل).
الموضـوع : العرض الفني لمهمات الكلور .

السيد المهندس/ مظهر أبو دومه - مدير المشروع .
شركة إتحاد أبناء حسن علام ومتيتو .

تحية طيبة وبعد ،،،

بالإشارة إلى المشروع المذكور أعلاه ، وإلى خطابكم رقم (NCWPP-LTR-HAM-MIS-0396) بتاريخ ٢٠١٨/٠١/٠٩ والمرفق به العرض الفني لمهمات الكلور وذلك بعد إستيفاء الملاحظات ، وبعد الدراسة والمراجعة نتشرف بأن نرفق لسيادتكم عدد (١) نسخة من العرض الفني لمهمات الكلور وذلك بعد الإعتماد.

يرجى العلم بأنة لم يتم تقديم العروض الفنية الخاصة بونش العنبر ، اسطوانات الكلور و اعمال التهوية و يرجى تقديمها في اسرع وقت ممكن.

هذا للعلم والتنبيه وإتخاذ اللازم .

وتفضلوا بقبول فائق الإحترام ،،،

رئيس قسم الميكانيكا
١ / ١٧
٢٠١٨
دكتور/ محمد عادل

مدير إدارة التصميمات
مهندس/ فاروق عبد الرحيم

المرفقات :
- عدد (١) نسخة من العرض الفني لمهمات الكلور "معتمدة" . مع مراعاتنا عدد (٢) نسخة من العرض الفني عند الاستلام

صورة مرسلة إلى :
- السيد المهندس/ عبد النبى فؤاد أحمد - المشرف العام على التنفيذ .
  الجهاز التنفيذي لمياه الشرب والصرف الصحي .
- السيد المهندس مدير المشروع (مكتب مصر للإستشارات) .

مكتب مصر للإستشارات
دراسات البيئة والبنية الأساسية
أ.د سامح عبد الجواد
40 - LE - OUT - 0049
DATE 17/1/2018 SIGN

RECEIVED
18 JAN 2018
HAC

NCWPP			
K.A. Construction			
Date:	20-01-2018		
	Action	INFO	Sign
PM		✓	
TOM	✓		
E/M		✓	
Control		✓	
Contract		✓	
CM WPP		✓	
CM pipe		✓	
QC			
HSE			
Admin			
Store			
External			
MOL	✓		
ECG			
A&A			
Sign			

Main office: 72 Gamet El Dawal St., Mohandessin
Tel. & Fax : 37620366 / 77 - 3799521/7
Mob.: 01006044753- 01068835392
Branch office: 14 Aden St., Mohandessin
Tel. & Fax : 37481757 - 37481275
E-mail :mc@misrconsult.com

المقر الرئيسى : ٧٢ جامعة الدول العربية - المهندسين
تليفاكس : ٣٧٦٢٠٣٦٦/٧٧ - ٣٧٤٩٩٥٢١/٧
محمول : ٠١٠٠٦٠٤٤٧٥٣ - ٠١٠٦٨٨٣٥٣٩٢
المقر الفرعى : ١٤ شارع عدن - المهندسين
تليفاكس : ٣٧٤٨١٧٥٧ - ٣٧٤٨١٢٧٥
موقع إلكترونى : www.misrconsult.com

MISR CONSULT
Envir. & Infrastructure Studies
Prof. Dr. Sameh Abdel-Gawad

مصـــر للإستشـــــارات
دراسات البيئة والبنية الأساسية
أ.د. سامح عبد الجواد

رقم الصادر: 40-LE-OUT-0049
التـــاريـــخ : ٢٠١٨/٠١/١٧م.

المشـــروع : محطة تنقية مياه الشرب طاقة ٥٠٠٠٠٠ م٣/يوم وخطي الطرد قطر ١٤٠٠ مم لتغذية مدينة نصر بـ (أبو عويقل).
الموضـوع : العرض الفني لمهمات الكلور .

السيد المهندس/ مظهر أبو دومه - مدير المشروع .
شركة إتحاد أبناء حسن علام ومتيتو .

تحية طيبة وبعد ،،،

بالإشارة إلى المشروع المذكور أعلاه ، وإلى خطابكم رقم (NCWPP-LTR-HAM-MIS-0396) بتاريخ ٢٠١٨/٠١/٠٩ والمرفق به العرض الفني لمهمات الكلور وذلك بعد إستيفاء الملاحظات ، وبعد الدراسة والمراجعة نتشرف بأن نرفق لسيادتكم عدد (١) نسخة من العرض الفني لمهمات الكلور وذلك بعد الإعتماد.

يرجى العلم بأنة لم يتم تقديم العروض الفنية الخاصة بونش العنبر ، اسطوانات الكلور و اعمال التهوية و يرجى تقديمها في اسرع وقت ممكن.

هذا للعلم والتنبيه وإتخاذ اللازم .

وتفضلوا بقبول فائق الإحترام ،،،

رئيس قسم الميكانيكا	**مدير إدارة التصميمات**
١٧ / ١ / ٢٠١٨	
دكتور/ محمد عادل	**مهندس/ فاروق عبد الرحيم**

المرفقات :
- عدد (١) نسخة من العرض الفني لمهمات الكلور "معتمدة" . + صورة من العرض الفني عند الاستلام بالاستلام (٢) عدد

صورة مرسلة إلى :
- السيد المهندس/ عبد النبى فؤاد أحمد - المشرف العام على التنفيذ . الجهاز التنفيذي لمياه الشرب والصرف الصحي .
- السيد المهندس مدير المشروع (مكتب مصر للإستشارات) .

مكتب مصر للإستشارات
دراسات البيئة والبنية الأساسية
أ.د. سامح عبد الجواد
40 - LE - OUT - 0049
DATE 17/1/2018 SIGN AM

Main office: 72 Gamet El Dawal St., Mohandessin
Tel. & Fax : 37620366 / 77 - 3799521/7
Mob.: 01006044753- 01068835392
Branch office: 14 Aden St., Mohandessin
Tel. & Fax : 37481757 - 37481275
E-mail :mc@misrconsult.com

المقر الرئيسى : ٧٢ جامعة الدول العربية - المهندسين
تليفاكس : ٣٧٦٢٠٣٦٦/٧٧ - ٣٧٤٩٩٥٢١/٧
محمول : ٠١٠٠٦٠٤٤٧٥٣ - ٠١٠٦٨٨٣٥٣٩٢
المقر الفرعى : ١٤ شارع عدن - المهندسين
تليفاكس : ٣٧٤٨١٧٥٧ - ٣٧٤٨١٢٧٥
موقع إلكترونى : www.misrconsult.com

HASSAN ALLAM CONSTRUCTION / METITO	NASR CITY WATER PURIFICATION PLANT(ABU OWEIKAL)	Transmittal No.: NCWPP-TR-HAM-MIS-0028	
	TRANSMITTAL	Submission Date: 09-01-2018	Revision: 02

Submitted To: Misr Consultant	Subject: Chlorination System Data sheet
Technical Office:	Stamp: CONSORTIUM HAC - MOL NCWPP ABO OWIKAL

DISCIPLINE:

Civil ☐	General ☐	Process ☐	Quality ☐
Mechanical ☒	Instrumentation ☐	Project Management ☐	
Electrical ☐	Piping ☐	Safety and Environment. ☐	

DOCUMENT ISSUED FOR:

Preliminary ☐	For Inter-discipline Check ☐	As Built ☐
For Design ☐	For final Check ☐	For use ☐
For Purchase ☐	For Engineer Review/ Approval ☒	For Information ☐
For Enquiry ☐	For Construction ☐	

DRAWING ISSUED FOR:

For Design ☒	For shopdrawing ☐	As Built ☐	Calculation Note ☐

ACTION TAKEN

- **code 1 :** Approved (work may proceed) ☑
- **code 2 :** Approved with comments (work may proceed) ☐
- **code 3 :** Not approved (work may not proceed) ☐
- **code 4 :** Review, Not required (work may proceed) ☐

Document List:

Document Number	Document Number
NCWTP-MOL-300-3-HP-10-REV3	

Comments:

يعتمد على مسئولية المقاول والاستشارية

مكتب مصر للاستشارات
الدراسات البيئية والبنية
د. سامح عبد الجواد
مكتب استشاري رقم

Rev	Date	Created By	Checked By	Description
3	1/1/2018	O.S	A.E	
2	14/11/2017	O.S	A.E	
1	8/10/2017	O.S	A.E	**First Issue**

Stamp:

METITO OVERSEAS ISSUED FOR APPROVAL ISSUED BY: DATE:

Owner:

ARAB REPUBLIC OF EGYPT
MINISTRY OF HOUSING, UTILITIES AND URBAN DEVELOPMENT

CAPW

Project:

The Construction Authority for Potable Water and Wastewater CAPW
DESIGN AND BUILD NASR CITY WATER PURIFICATION PLANT
CAPACITY 500,000 M3/DAY (ABU OWEIKAL)

Engineer:

CONSORTIUM HAC & METITO OVERSEAS

HASSAN ALLAM CONSTRUCTION

METITO

Key Plan:-

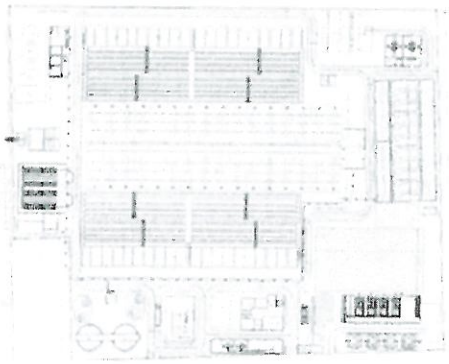

Issuing company:

METITO

Document References:	Contract No.:	155171000

Document Name:

CHLORINATION SYSTEM

Project No.	Company Code	Area Code	Line No.	Document Type	Document No.	Rev.
NCWTP	MOL	300	3	HP	010	3

Misr Consult -MIS. Comments on Metito Document Number NCWTP-MOL-300-HP-10 Rev 1 & Misr Consult - MIS Letter Ref. Number 40 - LE-OUT-602

	ملاحظات الإستشاري	رد المقاول
	Chlorination System Datasheet	
1	عدد ال Pre Chlorinators بالمذكرة الحسابية (4) المقد بعرضكم الفني (2) برجاء التوضيح	مرفق طيه رد الشركة المصنعة
2	عدد ال Post Chlorinators Injection بالمذكرة الحسابية (4) بينما المقدم بعرضكم الفني (2) برجاء التوضيح	مرفق طيه رد الشركة المصنعة
3	يتم تقديم قائمة بقطع غيار تكفي لمدة (5) سنوات معتمدة من المورد طبقا للموزاصفات	مرفق طيه قائمة معتمده من الشركة المصنعة لقطع غيار تكفى لمدض (٥) سنوات
4	يتم تقديم نسخة واضحة من رسم Preliminary على لوحة لا نقل عن مقاس A3 موضحا بها الجدول وجميع التفاصيل	مرفق طيه رسم Preliminary PFD على لوحه مقاس A3
5	ورد ال Data sheet ان بلد المنشا U.K بينما ورد ببعض الاجهزة المقم ان بلد المنشا خلاف ذلك وعلى سبيل المثال (E-2000 EVAPORATOR) بلد امنشا Germany برجاء التوضيح	مرفق طيه رد الشركة المصنعة
6	توضيح بلد المنشا لجميع الطلمبات Booster Caustic soda pump - sample pumps	مرفق طيه رد الشركة المصنعة
7	توضيح بلد المنشا لل Centrifugal Fans وتحديد تالطراز المقدم	مرفق طيه رد الشركة المصنعة
8	***لم يتم تقديم العروض الفنية للمهمات الاتية:***	
	مراوح التهوريد - اسطوانات الكلور- ونش العنبر - المهمات المستخدمة للمحافظة على سلامة العمال مثل - face mask filter - شنطة الطوارىء - protective clothes	سيقوم المقاول بتقديم عرض فنى منفصل لكلا من أعمال التهوية (HVAC) والمراوح المستخدمة ،وألاوناش لجميع عنابر المحطة، واسطوانات الكلور من الموردين المعتمدين بمخضر لجنة البت. أما بخصوص المهمات المستخدمة للحفاظ على سلامة العمال مرفق طيه رد الشركة المصنعة
9	توضيح على اي اساس تم اختيار تصرف ورفع الطلمبات المقدم بالعرض الفني	مرفق طيه رد الشركة المصنعة
10	توضيح نوعية مواسير الربط بين الاجهزة وكذلك نوعيات المحابس المستخدمة والقطع الختصة	مرفق طيه رد الشركة المصنعة
11	طلمبات caustic soda pump الطراز المقدم lowara بينما المعتمد بلجنة البت ebara برجاء التوضيح	مرفق طيه رد الشركة المصنعة
12	ال centrifugal fans الطراز المقدم s&p بينما الموجود بلجنة البت RKR & ROBUSCI برجاء التوضيح	يرجى العلم بأن العروض المعتمدة بمحضر لجنة البت من شركة (RKR ROBUSCI ,) تخص نوافخ الهواء (Backwash Scouring Air Blowers) وليس Centrifugal fans

Wallace & Tiernan®
an EVOQUA brand

- عدد الـ Pre chlorinators injectors بالمذكرة الحسابية (٤) بينما المقدم بعرضكم الفني (٢) برجاء التوضيح.

Comment: Thanks very much for the above question. Because there is two points of injectors, the correct total number of proposed Pre-chlorinators injectors is 2 units, (i.e. one injector for each Pre-Chlorinator) Capacity of each injector is 174 kg/hr and each injector will require 70 m3/hr of water, based on total back pressure from all causes at the injector's outlet of 2 bar gauge. Please see the diagram below showing the Pre-chlorinators arrangement:

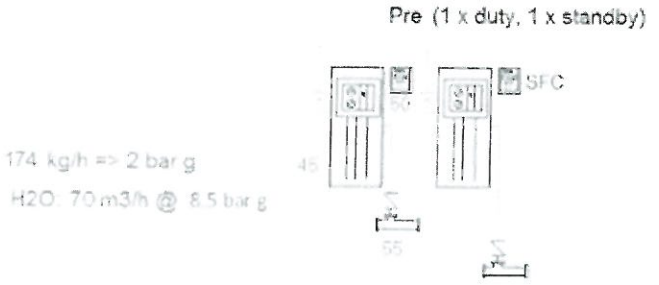

Evoqua Water Technologies Ltd
One60 London Road, Sevenoaks
Kent , TN13 1BT, UK

Telephone: +44 (0) 1732 771777
Facsimile: +44 (0) 1732 771800

- عدد الـ Post chlorinators injectors بالمذكرة الحسابية (٤) بينما المقدم بعرضكم الفني (٢) برجاء التوضيح.

Comment: Thanks very much for the above question, the correct total number of proposed Post-chlorinators injectors is 2 units, (i.e. one injector for each Post-Chlorinator) Capacity of each injector is 85 kg/hr and each injector will require 45 m3/hr of water, based on total back pressure from all causes at the injector's outlet of 7 bar gauge. Please see the diagram below showing the post chlorinators injectors arrangement.

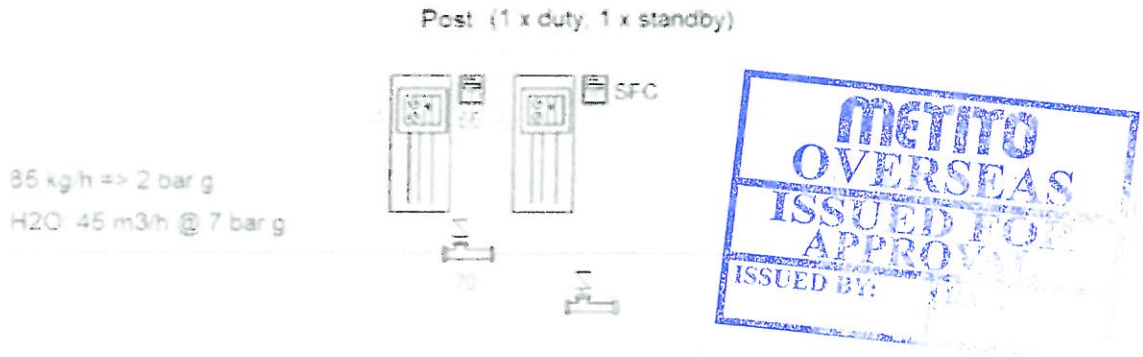

- يتم تقديم قائمة بقطع غيار تكفي لمدة (٥) سنوات معتمدة من المورد طبقاً للمواصفات.

Comment: Thanks very much for the above question. Please see the attached revised offer which now includes 5 years spares.

- يتم تقديم نسخة واضحة من رسم Preliminary PFD على لوحة لايقل عن مقاس A3 موضحاً بها الجدول وجميع التفاصيل.

Comment: Thanks very much for the above question. Please see the attached.

- ورد بالـ Data sheet ان بلد المنشأ U.K بينما ورد ببعض الأجهزة المقدمه أن بلد المنشأ خلاف ذلك وعلى سبيل المثال (E-2000 EVAPORATOR) – بلد المنشأ Germany برجاء التوضيح.

evoqua
WATER TECHNOLOGIES

Comment: Thanks very much for the above question. Please below confirmation of origin for all imported item.

Item	Quantity	Description	Part Number	Origin
5.0	1	CHANGEOVER UNIT SERIES AU-015/CCU;230VAC,	W3T166588	Germany
10.0	3	EVAPORATOR E-2000 200KG/H	W3T385409	Germany
15.0	3	WATER SUPPLY ASSEMBLY; AUTO. REFILLING,	W3T375423	Germany
20.0	9	IMMERS. TYPE HEATER; ERKT42;230/400V;6KW,	W3T165536	Germany
25.0	3	CONTROL PANEL EVAPORATOR E-2000,	W3T383333	Germany
30.0	1	PRESSURE RELIEF SYSTEM LIQUID CL2	W3T292348	USA
35.0	3	Gas pressure reducing valve. 200KG/H;1NPT;230V,	W3T167512	Germany
40.0	3	250 Kg/h Portacel type Vacuum Regulator	ZZZ9999	United Kingdom
45.0	2	GAS FEED SYSTEM V-2030 200 AUTO. 230V, Pre-chlorinators	W3T244794	Germany
50.0	2	ELECTRONIC SFC SC 100-240VAC; Pre-chlorinator controller	W3T158819	Germany
55.0	2	Pre-chlorinator Injector	ZZZ9999	Germany
60.0	2	GAS FEED SYSTEM V-2030 200 AUTO. 230V, Post-chlorinators	W3T244794	Germany
65.0	2	MODULE, ELECTRONIC SFC PC 100-240VAC; Post-chlorinators controllers	W3T158817	Germany
70.0	2	Post-chlorinator injector	ZZZ9999	Germany
80.0	2	Gas feeder series V10k,manual control, Supernatant chlorinator	N.100.A	Germany
85.0	2	Injector 3/4', Supernatant injector	N.101.A 140 F	Germany
90.0	6	ELECTRONIC MODULE GMS PLUS 200-240VAC; chlorine gas detection system	W3T158771	Germany
95.0	10	SENSOR KIT GMS+ CL2/CLO2 0/5-20PPM 2M,	W3T158797	Germany
100.0	6	FLASHING LIGHT KLAXON 230VAC;30MA;IP65,	W2T505061	Germany
105.0	2	MODULE, ELECTRONIC SFC 100-240VAC; chlorine analyser	W3T158815	Germany
110.0	2	SENSOR MEASURING MODULE DEPOLOX 5-PL, chlorine analyser wet cell	W3T162670	Germany
111.0	3	LINE BALL VALVE TYPE F15;RP1";PN40;CL2,	W3T172149	France

- توضيح بلد المنشأ لجميع الطلمبات (Booster-caustic soda pump-sample pumps)

Comment: Thanks very much for the above question. Please below confirmation of origin of origin below.

- Booster Pumps : European community
- Caustic Soda Pumps : Italy
- Sample Pumps : Italy

evoqua
WATER TECHNOLOGIES

- توضيح بلد المنشأ لـ Centrifugal fans وتحديد الطراز المستخدم.

Comment: Thanks very much for the above question. Please below confirmation of origin of origin below.

1- Centrifugal Fans :
   - Model : CM/4-355/145 5.5 KW
   - Origin : Spain

- لم يتم تقديم العروض الفنية للمهمات الآتية :-
مراوح النهوية – اسطوانات الكلور – ونش العنبر – المهمات المستخدمة للحفاظ على سلامة العمال
مثل (filter – face mask - شبطة الطوارئ – protective clothes).

Comment: Thanks very much for the above question. Please see attached.

Personal protection gears:

- Face Musk : Full face Musk with Anti Acid Filter Brand : 3M - origin : European community
- Breathing Apparatus consists of
   1. Air Tank
   2. Air Pressure Regulator + Mouse Piece
   3. Musk
   4. Hood
   5. Anti-Chemical Coverall
   6. Plastic Boot
   7. Rubber Gloves
- Emergency Kit for Chlorine Drum
  As per the attached

مكتب مصر للاستشارات
الدراسات البيئية والبنية الاساسية
د سامح عبد الجواد
مكتب استشارى رقم : ٢٧٦

OETTO
OVERSEAS
ISSUED FOR
APPROVAL
ISSUED BY:

evoqua
WATER TECHNOLOGIES

- توضيح على أي أساس تم اختيار تصرف ورفع الطلمبات المقدم بالعرض الفني.

Comment: Thanks very much for the above question. Please see comment below:

For the Pre-Chlorination Injectors, please see the following values:

- Total back pressure from all causes at the injector's outlet is no greater than 2 bar g.
- Max dosing rate for each Pre-Chlorinator will be 174 kg/h.

Therefore each injector will require Q of 70 m3/h @ 8.5 bar g. Please see the attached curve titled Performance diagram for the Pre Injectors 174 kg_70m3_2 bar g.pdf
To achieve 70 m3/h @ 8.5 bar g, the proposed booster pump is model CR 64-4 by Grundfos, please see attached curve for this booster pumps.

For the Post-Chlorination Injectors, please see the following values:

- Total back pressure from all causes at the injector's outlet is no greater than 2 bar g.
- Max dosing rate for each Post-Chlorinator will be 85 kg/h.

Therefore each injector will require Q of 45 m3/h @ 7 bar g. Please see the attached curve titled
Performance diagram for the Post Injectors 85 kg_45m3_2 bar g.pdf
To achieve 85 m3/h @ 7 bar g, the proposed booster pump for post injectors is model post CR 45-4-2 by Grundfos. please see attached curve for this booster pumps.

For the small chlorination injectors, please see the following values:

- Total back pressure from all causes at the injector's outlet is no greater than 1.5 bar g.
- Max dosing rate for each Chlorinator will be 1 kg/h.

Therefore each injector will require Q of 1 m3/h @ 4 bar g. Please see the attached curve titled
Curves for 1 kg injector for the small chlorination system.pdf

To achieve 1 m3/h @ 4 bar g, the proposed booster pump for the small chlorination system is model CR 1-7 by Grundfos. please see attached curve for this booster pumps.

مكتب مصر للإستشارات
للدراسات البيئية والبنية الاساسية
أ د سامح عبد الجواد
مكتب استشاري رقم ٢٧٦

METITO
OVERSEAS
ISSUED FOR
APPROVAL
ISSUED BY:

evoqua
WATER TECHNOLOGIES

- توضيح نوعية مواسير الربط بين الأجهزة وكذلك نوعيات المحابس المستخدمة و القطع الخاصة.

Comment: Thanks very much for the above question. Please see attached.

1- Steel Piping & Fittings :
   - Seamless Pipes 1"Φ seamless schedule 80 (Wall Thickness 4.55 mm)
   - Fittings (Elbow ,Tee)rating 3000 psi threaded connection Flanges PN16
   - On Line Valves Are Monel Threaded Connection
   - Angel Header & Drum Auxiliary Valves
     1. Body : Forged Brass
     2. Spindle Monel

2- U P.V.C Piping & Fittings :
   - For Pressure Water Lines Pipes Fittings &Valves are PN16
   - For Vacuum Gas Lines Pipes Fittings &Valves are PN10

- طلمبات (caustic soda pump) الطراز المقدم lowara بينما المعتمد بلجنة البت Ebara (برجاء التوضيح).

Comment: Thanks very much for the above question.

Caustic Soda Pump Brand Modified to Match With the Submitted Brand Ebara Type as Follows:
3NM 40-200/5.5
Q = 30 Cubic Meter /hr @ 38 M Head
Materials S.S 316

- الـ centrifugal fans الطراز المقدم (S&P) بينما الموجود بلجنة البت (RKR & ROBUSCI) برجاء التوضيح.

Comment: Thanks very much for the above question.
Eng. Amin Elerian to reply please.

مكتب مصر للاستشارات
للدراسات البيئية والبنية الأساسية
أ.د سامح عبد الجواد
مكتب استشاري رقم ٢٧٦

METITO OVERSEAS
ISSUED FOR APPROVAL
ISSUED BY:

1. Main Characteristics

Equipment	:	**Chlorination System**
Manufacturer	:	Wallace & Tiernan
Country Of Origin	:	As Per atached Table
Number of Streams	:	Three
Max Chlorine Dose Rate for Pre	:	8 g/m^3 – Average 5 ppm
Max Chlorine Dose Rate for Post	:	4 g/m^3 – Average 2 ppm
Evaporators Quantity	:	Three
Evaporator Capacity	:	200 kg/h Cl2
No. of Chlorinators for Pre	:	2(1D/1S)
No. of Chlorinators for Post	:	2(1D/1S)
Pre Chlorinators Capacity	:	200 kg/hr each
Post Chlorinators Capacity	:	200 kg/hr each
Pre Chlorinators Injectors	:	2 Units 174 kg/hr each
Post Chlorinators Injectors	:	2 Units 85 kg/hr each
Chlorine Residual Analyzers	:	2(1D/1S)

Description	Quantity
II.1) Steel Seamless Pipes and Accessories - 1"Φ seamless schedule 80 - Fittings rating 3000 psi threaded connection Flanges PN16	1(Lot)
II.2) uP.V.C PIPING AND FITTINGS - Pipes locally manufactured, Fittings & Valves are PN 16 for water & PN 10 for chlorine gas	1(Lot)
II.3) Turn Union	52 (Pair)
II.4) DRUM LIFTING BEAM	2

II.6) DRUM AUXILARY VALVES + HEADER VALVE - Header Valve: Locally manufactured size 3/4"Φ threaded angle valve. - Drum Auxiliary Valve: Angle valve Male threaded & Female threaded hexagonal nut at both ends.	20 Drum Auxilary Valve & 20 Header Valve
II.7) FLEXIBLE CONNECTION - Local manufactured from bras tube with two hexagonal nuts at each end	20
II.8) SUSPENDED WEIGHTIER - Electronic : Digital with Capacity : 2 TON - Brand/Type : EXCELL - FJ series - Origin : TAWIAN - With Remote Control	2
II.9) BREATHING APPARATUS Breathing Apparatus comprising of: - Face Mask - Air cylinder with capacity Approximate 30 Minutes - Hood - Gloves - Pressure Regulator - Brand : SCUBA-PRO & OR MARES OR EQUIVELENT - Origin : Asian ,EU and or U.S.A	2
II.10) CABLES, TRAYS & ACCESSORIES - Cable trays: plastic conduit fixed to the walls with plastic covers inside chlorine building. - Materials : CU/PVC/PVC connect only between our local panel and the individual drives and controls in the scope of this offer. - Maker: Elsewedy or Giza cable Co.	1(Lot)
II.11) NEUTRALIZATION TOWER MEDIA & SPRINKLES The neutralization tower will be equiped with:- - plastic media with 30 cm thick covering the tower cross section area - set of sprinklers with p,v.c loop inside the tower above the plastic media	1

II.12) AIR DUCT FOR AIR BLOWER - The air blowers disharge will be connected to the neutralization tower by air ducts fabricated from fiber glass or up.v.c with 300 mm nominal diameter.	2
II.13) INJECTION POINT - The pre, post & supernatant chlorine injection lines will be connected to the the injection points using the injection points fabricated from up.v.c pipe with disk flange and immersed inside the pipe lin	3
II.14) AUDIO & VISUAL ALARMS - The audio & visual alarms will be mounted on walls of the chlorine building and have two different signals one for operation faults and the other for the chlorine leakage those alarm should be heard and seen from 100 m distance.	-
II.15) FACE MASK The full face musk equipped with :- - transparant plastic covering the operator face - anti chemicals gas filter - brand :3m - origin : u.k & ec	5
II16) SAFETY SHOWER Designed as combined unit for floor mounting - Safety shower with triangular grip and ball valve made or brass - Eye shower with two spray heads", ball valve made of brass and integrated flow control - Supply and drain line 1 1/4", minimum supply pressure 2 bar, integrated flow control.	1

مكتب مصر للاستشارات
للدراسات البيئية والبنية الاساسية
أ.د سامح عبد الجواد
مكتب استشارى رقم : ٢٧٦

METITO OVERSEAS
ISSUED FOR APPROVAL
ISSUED BY:

2. Spare Parts

115.0	10	SPARE PARTS KIT V-2030	W3T159313
120.0	10	SET OF GASKETS V10K	W3T159881
125.0	15	MAINTENANCE KIT E-2000	W3T158881
130.0	15	SERVICE KIT VAC REG 250kg	ZZZ9999
135.0	10	KIT,SERVICE 1 YEAR DEPOLOX 5 NON & PRESS	W3T291853
140.0	5	ELECTROLYTE SOLUTION 250ML, CHLORINE	W3T173196

مكتب مصر للاستشارات
للدراسات البيئية والبنية الاساسية
أ.د. سامح عبد الجواد
مكتب استشاري رقم : ٣٧٦

METITO
OVERSEAS
ISSUED FOR
APPROVAL
ISSUED BY:

3. Chlorination System Calculation & Description

Wallace & Tiernan®
an EVOQUA brand

Title: Technical Submittal for Main Chlorination Equipment Supplied by Evoqua Wallace & Tiernan

Project: Abo Owekial WTP 500,000 M3/Day

Client: Metito- Egypt

Evoqua Water Technologies Ltd
One60 London Road, Sevenoaks
Kent , TN13 1BT, UK

Telephone: +44 (0) 1732 771777
Facsimile: +44 (0) 1732 771600

evoqua
WATER TECHNOLOGIES

Index

evoqua
WATER TECHNOLOGIES

System Calculation:

Name of the plant : Abu Oweikal
Customer: Metito
End-user: CAPWO

Parameters	Value	Units / Commetns
Max Daily flow	500,000	m3/d
Max Daily flow	20833.3	m3/h
Number of streams	3	pre, post, supernant, (three diffrnet dosing points)
Max chlorine dose rate for pre	8.0	g/m3 - Averge 5ppm
Max chlorine consumption for pre	166.7	kg/h
Max chlorine dose rate for post	4.0	g/m3 - Averge 2ppm
Max chlorine consumption for post	83.3	kg/h
Design flow rate to be chlorinated by Supernant-chlorainatio	130.3	m3/hr
Max chlorine dose rate for Supernant-chlorainatio	10.0	g/m3
Max chlorine consumption for Supernant-chloraination	1.30	Kg/hr (continues)
total max Cl2 consunption for pre, post and supernant-chloraination	251.3	kg/h
Amount of chlorine per chlorine contrainer	800	kg
At max dose 1 chlorine container will be enough for	0.1	day
At max dose 1 chlorine container will be enough for	3.2	hour
Number of chlorine container connected	8	drums (as per the current selection of Metito)
duty / standby arragment for the chlorine contrainer arrangment	4.0	duty/standby
At Max dosing at Max total flow- total (duty and standby) connected Cl2 contrianiers will l	1.1	days
	25.5	hours
Selected disinfection equip		
Evaporators	3	units each 200kg/hr TUV certified c/w all accessories
Chlorine gas change over system	1	system
Change over system type	1	Chlorine liquid type
Total number of chlorinators for pre	2	1 duty / 1 standby, all floor standing
Pre chlorinators capacity	200	kg/hr each
Pre chlorinators injectors	2	units, 174 kg/hr each
Control Type of the pre chlorinators	Auto	Water flow based
Total number of chlorinators for post	2	1 duty / 1 standby, all floor standing
Post chlorinators capacity	200	kg/hr each
Post chlorinators injectors	2	units, 85 kg/hr each
Control Type of the post chlorinators	Auto	based on Cl2 residual signal
Total number of chlorinators for supernant-chlorainatio	2	1 duty / 1 standby, wall mounting
Control Type of the supernant-chlorinators	Manual	
Total No of Vaccum Regulators	3	250 kg/h each
CL2 Gas detection system	6	sets with 10 Sensors in total
Chlorine resduial analyseres	2	1duty/1standby
5 years spare	yes	offered as per manufacturer recommendations

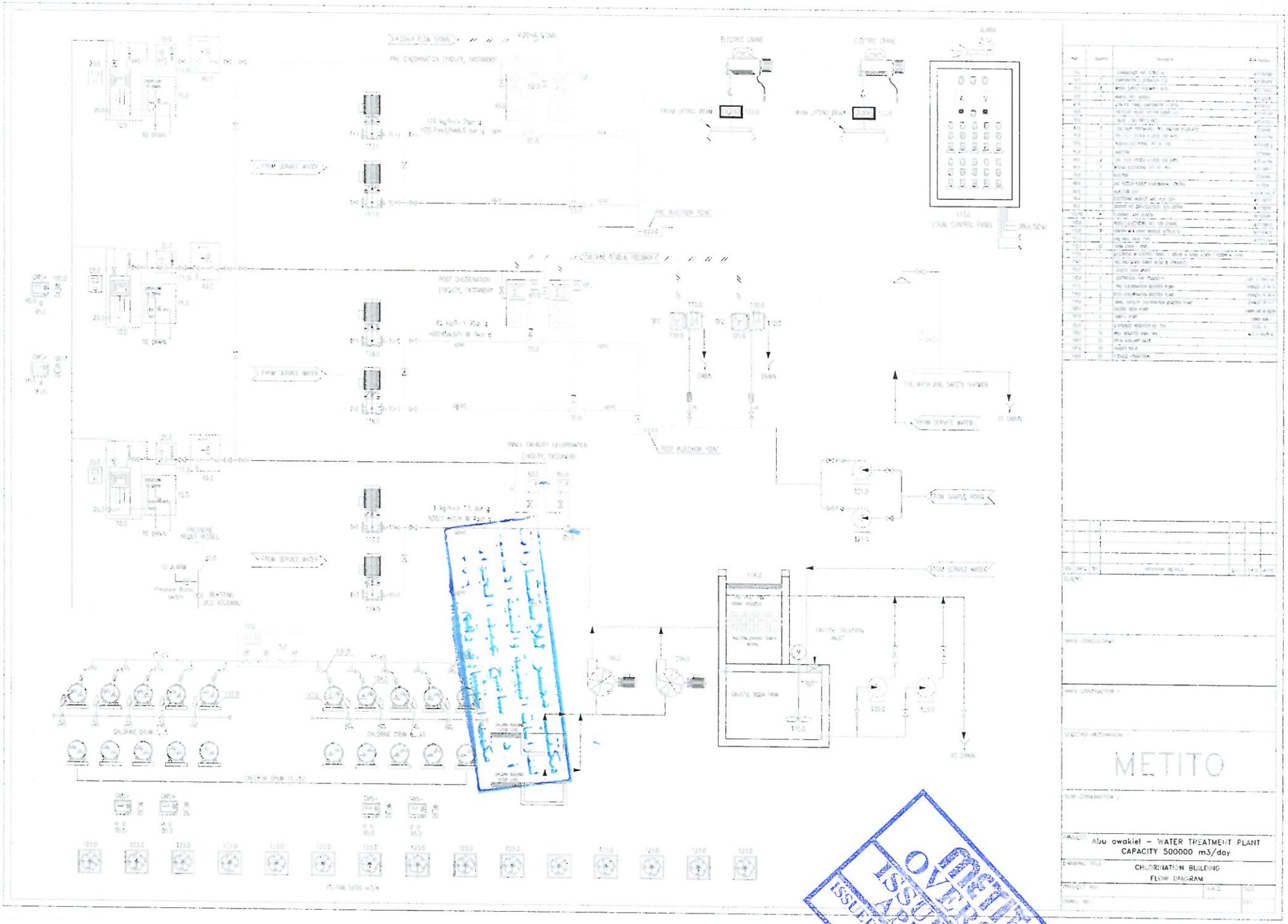
METITO
Abu owakiel – WATER TREATMENT PLANT
CAPACITY 500000 m3/day
CHLORINATION BUILDING
FLOW DIAGRAM

evoqua
WATER TECHNOLOGIES

List of Main Equipment:

Item	Quantity	Description	Part Number
5.0	1	CHANGEOVER UNIT SERIES AU-015/CCU;230VAC,	W3T166588
10.0	3	EVAPORATOR E-2000 200KG/H CL2,	W3T385409
15.0	3	WATER SUPPLY ASSEMBLY; AUTO. REFILLING,	W3T375423
20.0	9	IMMERS. TYPE HEATER; ERKT42;230/400V;6KW,	W3T165536
25.0	3	CONTROL PANEL EVAPORATOR E-2000,	W3T383333
30.0	1	PRESSURE RELIEF SYSTEM LIQUID CL2	W3T292348
35.0	3	Gas pressure reducing valve. 200KG/H;1NPT;230V,	W3T167512
40.0	3	250 Kg/h Portacel type Vacuum Regulator	ZZZ9999
45.0	2	# GAS FEED SYSTEM V-2030 200 AUTO. 230V,	W3T244794
50.0	2	MODULE, ELECTRONIC SFC SC 100-240VAC; WM,	W3T158819
55.0	2	Injector	ZZZ9999
60.0	2	# GAS FEED SYSTEM V-2030 200 AUTO. 230V,	W3T244794
65.0	2	MODULE, ELECTRONIC SFC PC 100-240VAC; WM,	W3T158817
70.0	2	injector	ZZZ9999
80.0	2	Gas feeder series V10k,manual control	N.100.A
85.0	2	Injector 3/4',	N.101.A 140 F
90.0	6	ELECTRONIC MODULE GMS PLUS 200-240VAC;WM,	W3T158771
95.0	10	SENSOR KIT GMS+ CL2/CLO2 0/5-20PPM 2M,	W3T158797
100.0	6	FLASHING LIGHT KLAXON 230VAC;30MA;IP65,	W2T505061
105.0	2	MODULE, ELECTRONIC SFC 100-240VAC; WM,	W3T158815
110.0	2	SENSOR MEASURING MODULE DEPOLOX 5-PL,	W3T162670
111.0	3	LINE BALL VALVE TYPE F15;RP1";PN40;CL2,	W3T177149
		Manufacturer Recommended Spares for 5 years	
115.0	10	SPARE PARTS KIT V-2030;FOR 2 YEARS,	W3T159313
120.0	10	SET OF GASKETS V10K,	W3T159881
125.0	15	MAINTENANCE KIT E-2000;ANNUALLY,	W3T158881
130.0	15	SERVICE KIT VAC REG 250kg	ZZZ9999
135.0	10	KIT,SERVICE 1 YEAR DEPOLOX 5 NON & PRESS,	W3T291853
140.0	5	ELECTROLYTE SOLUTION 250ML, CHLORINE,	W3T173196

evoqua
WATER TECHNOLOGIES

Main Equipment Details:

1.Automatic Switchover System (item# 5.0):

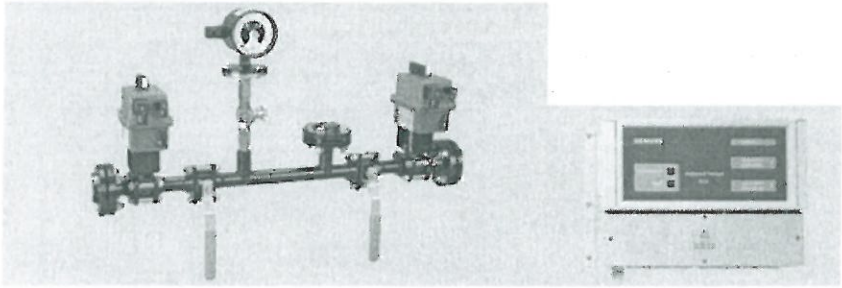

1 unit off Automatic Switchover system will be supplied. As shown in the example above pic, the purpose of this system is switchover automatically from one bank of chlorine drums to the other. This system can withstand up to 1000 kg/h of liquid chlorine at 20 degrees centigrade. This system consists of the following components:

- 2 units off line mounting, electrically actuated liquid shut-off valve, drive open & drive closed, manual O/ride, Rc1, ball type,110-230V, suitable for liquid chlorine.
- 1 unit off liquid pressure gauge with adjustable electrical under-pressure contact (max & min) - 100 mm diameter.
- 2 unit off line mounting, manual liquid Shut-off Valve, ball type, Rc1, PTFE packing & gaskets, steel body, monel ball.
- 1 unit off control panel type CCU 230V.

evoqua
WATER TECHNOLOGIES

2.Evaporators (item# 10-25):

3 units off evaporators' model E-2000 fully TUV certified will be supplied, the purpose of this unit is to evaporate liquid chlorine. This unit capacity is 200 kg/h Cl2, it is of pressure vessel type comes with TUEV certificate test pressure: up to 60 bar g. power supply: 3/N/PE 400/230 V, 50 Hz. Comes complete with standard accessories. Comes complete with line mounting manual liquid Shut-off Valve, ball type, steel body, monel ball. Comes complete with state of the art HMI control panel and service water auto filling accessories.

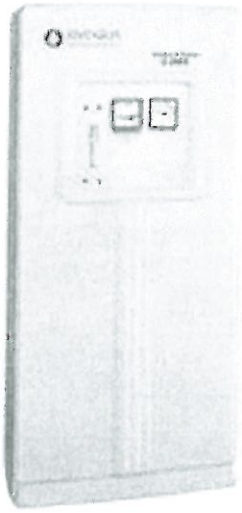

eVOQUA
WATER TECHNOLOGIES

3.Liquid Line Pressure Relief System (item# 30):

1 unit liquid line pressure relief system series 50-200. The purpose of this units is to contain any trapped liquid chlorine and to protect liquid chlorine pipework.

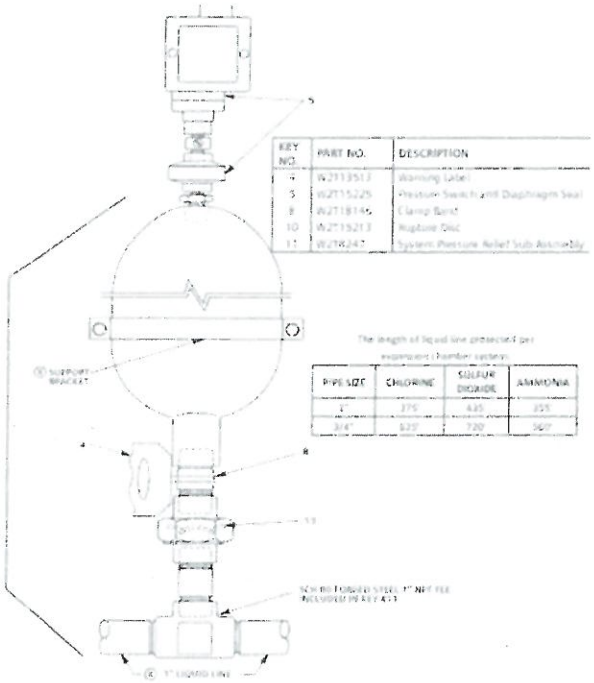

evoqua
WATER TECHNOLOGIES

4.Gas Pressure Reducing Valve (item# 35):

3 units of Electric Operated Series 50-185 GPRV. The purpose of this unit is to keep chlorine gas pressure within acceptable limits. Each unit will be supplied for each evaporator's stream.

SERIES 50-185 VALVE WITH ELECTRIC OPERATOR FOR AUTOMATIC SHUT-OFF. VALVE BODY IS WEATHER-RESISTANT. OPERATOR IS UL LISTED.

evoqua
WATER TECHNOLOGIES

5.Vacuum Regulators (item# 40):

3 units off wall mounted vacuum regulator each rated at 250 kg/h. The purpose of this unit is to allow the correct amount only, of chlorine gas to pass through proportional to the vacuum being created by the injectors.

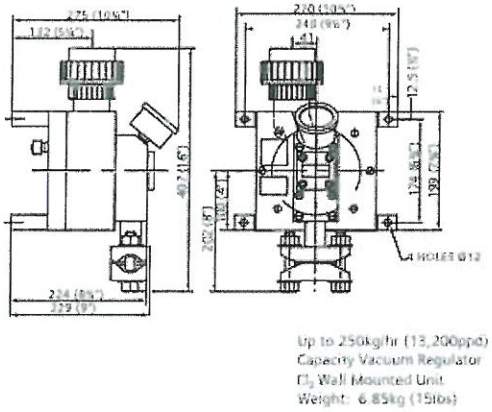

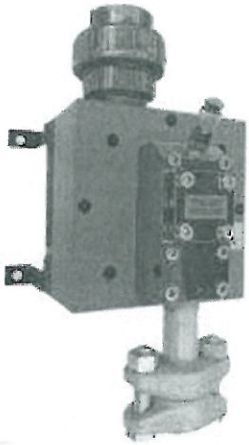

Up to 250kg/hr (13,200ppd) Vacuum Regulator

6. Chlorinators (item# 45, 55, 60, 70, 80, 85):

Total 4 units off floor standing automatic chlorinators, Type V-2030 max capacity 200 kg/hr complete with all accessories, comes with V-notch and Differential regulating valve, comes with a large, scale flowmeter indicating the gas feed rate. Will be offered in the following arrangements:

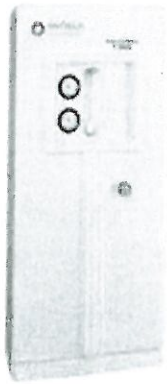

evoqua
WATER TECHNOLOGIES

2 units off these chlorinators (1 duty & 1 standby) will be offered for the pre-chlorinators. Each will be controlled proportionally to the water flow, through one detected SFC-SC controllers for each chlorinator. As shown below in the diagram. Each chlorinator will be supplied by its own detected injector.

FLOW PROPORTIONAL CONTROL

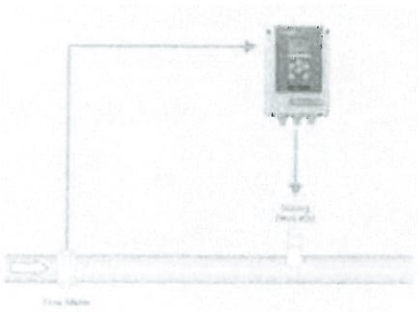

2 units off these chlorinators (1 duty & 1 standby) will be offered for the post-chlorinators. Each will be controlled proportionally to the chlorine residual in the water and or water flow on loop arrangement through one detected SFC-PC controllers for each chlorinator. As shown below in the diagram. Each chlorinator will be supplied by its own detected injector.

COMPOUND LOOP CONTROL
mit Festwertregelung

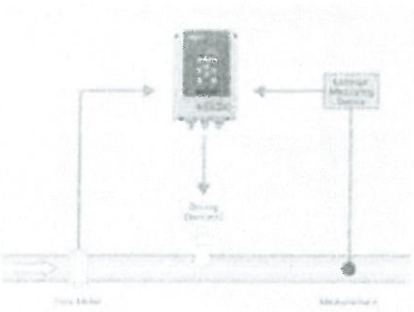

Also, there will be 2 units of V10K wall mounting manual chlorinator will be supplied for supernant-chloriantion on (1 duty & 1 standby) arrangement. Capacity 1 kg/hr. each complete with its own detected injector, and all necessary accessories.

V10k manual system

3/4" injector
up to 4 kg/h Cl2

7. Pre Chlorinators Controllers (item# 50):

2 units off chlorinator controllers type SFC-SC will be supplied. One unit of this controller will be supplied for each pre-chlorinator. This unit is to control the duty pre-chlorinator proportionally to water flow on a set point arrangement.

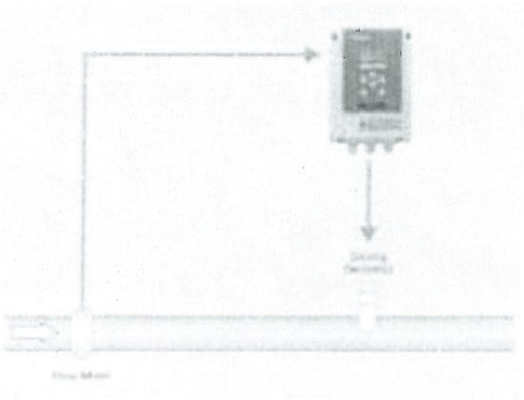

8. Post Chlorinators Controllers (item# 65):

2 units off chlorinator controller type SFC-PC Electronic module Process control unit will be supplied. One unit of this controller will be supplied for each post chlorinator. This unit is to control the duty post-chlorinator proportionally to the chlorine residual level and or water flow or both signals on a compound loop arrangement.

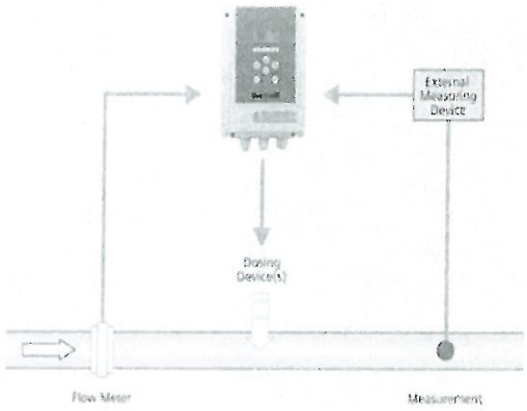

9.Chlorine Gas Detection System (item# 90, 95, 100):

6 units off chlorine gas detection system model GMS PLUS. 200-240V ac, 50-60 Hz, will be supplied, also 10 chlorine gas sensors, and 6 audio/visual alarm units will be supplied per the following arrangement.

- 2 gas sensors and 1 audio/visual alarm unit controlled by one GMS PLUS will be fitted in the connected chlorine drums chamber.
- 1 gas sensors and 1 audio/visual alarm unit controlled by one GMS PLUS will be fitted in the evaporators room chlorine drums chamber.
- 7 gas sensors and 4 audio/visual alarm unit controlled by four GMS PLUS will be fitted in the chlorine drums storage chambers.

evoqua
WATER TECHNOLOGIES

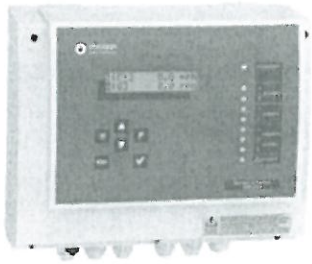

Electronic Module GMS Plus Part Number W3T158771

A MAX mark
B MIN mark

CL2 Gas Sensor Kit 0-20ppm Part Number W3T158797

Flashing light Kaxon Part Number W2T509061

For optical and acoustical warning for wall mounting. Ambient temperature: - 20...+50 degree.
Flashing frequency: approx.. 1 Hz
Colour of unit: red
Capacity: 92 dB (A)
Operation: 100% ED
Enclosure: IP 33
Rated current: 30 mA
Power supply: 230 VAC

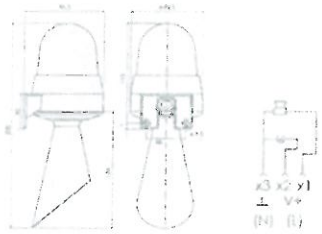

evoqua
WATER TECHNOLOGIES

10. Chlorine Residual Analyzer/Controller (item# 105, 110):

2 systems off Chlorine Analyzer/Controller, this system is to control the pre-chlorinators based on chlorine residual feedback signal.

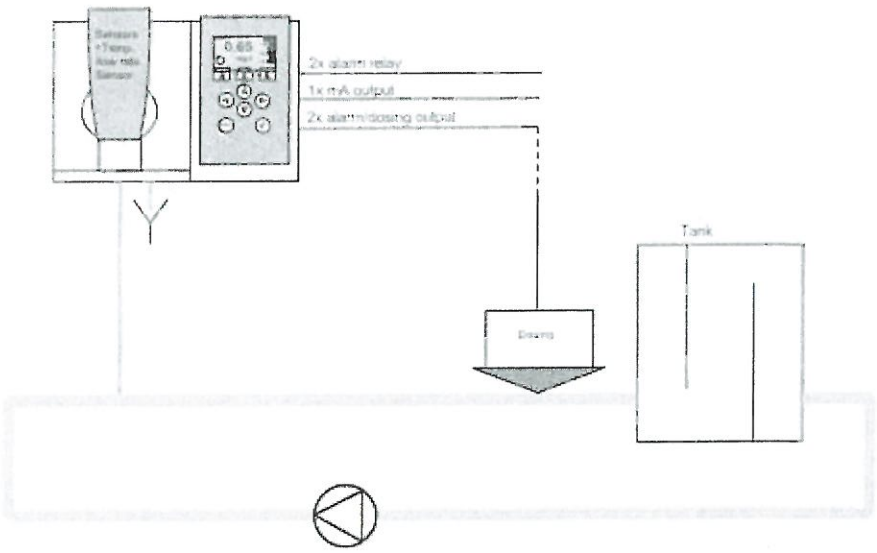

4.1 Evaporator

evoqua
WATER TECHNOLOGIES

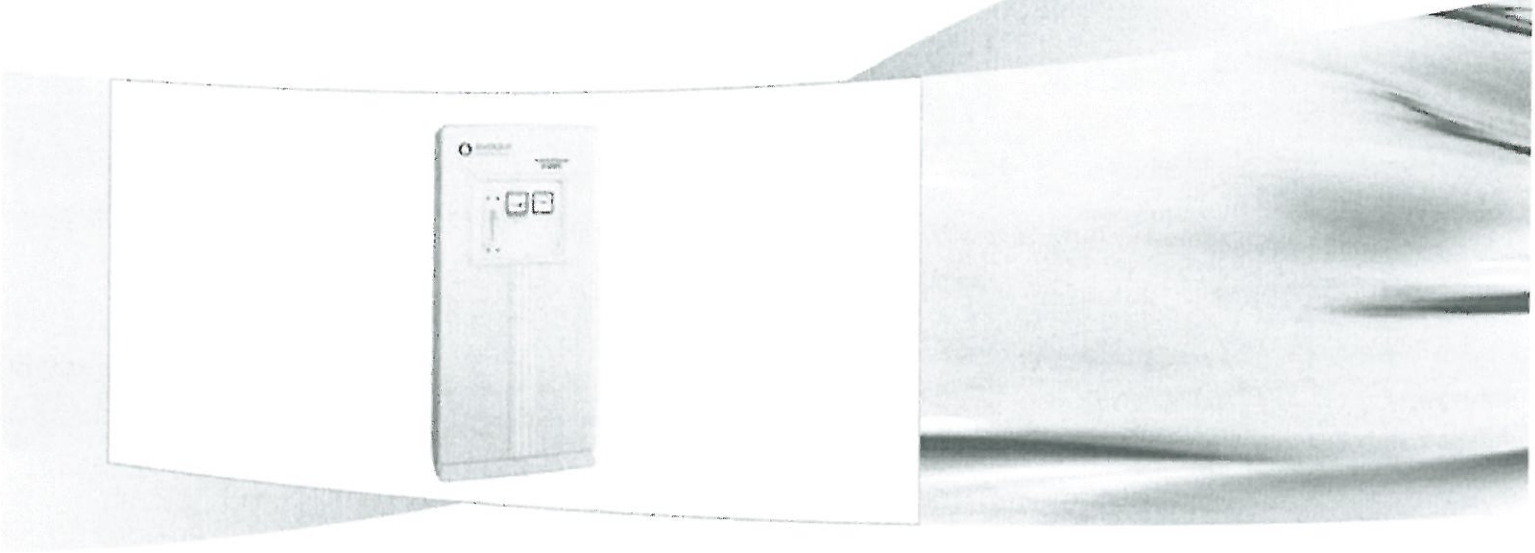

E-2000 EVAPORATOR

WALLACE & TIERNAN® GAS FEED SYSTEMS

The E-2000 evaporator is a water-immersed tank heat exchanger specifically designed for the conversion of liquid chlorine to a gaseous state. The latent heat of evaporisation limits gas withdrawal from containers. An evaporator is necessary wherever the rate of gas withdrawal from multiple containers is not fast enough to keep with requirements. This evaporator can also be adapted for handling other gases such as sulphur dioxide.

General

Where large quantities of gas are required, the evaporator will permit a substantial reduction in the number of containers employed and, therefore, save valuable space. In the case of chlorine, the use of an evaporator is recommended when the rate of unaided gas withdrawal is above 40 kg/h, or when the liquid supply is derived from a bulk storage system.

Immersion-type electric heaters supply the heat for the hot water bath. An optional arrangement is available for steam heating from an external source. The vapourising chamber consists of a steel cylinder designed for a test pressure of 60 bar which is guaranteed by a TÜV certificate of the German Testing Authority for Pressure Vessels. Both gas chamber and water-bath tank are cathodically protected by three magnesium anodes against corrosion from the hot water.

The water tank is heavily galvanised inside and out. It is enclosed by an insulating jacket to prevent loss of heat. The whole apparatus is housed in a corrosion-proof fibreglass reinforced polyester cabinet for floor mounting. The two-piece cabinet can easily be removed allowing free access to all components of the evaporator and thus providing high serviceability.

A separate wall mounting control panel houses the fully automatic evaporator and alarm circuitry. All vital operating and alarm signals are indicated by pilot lights on this panel. In the case of major chlorination systems, the evaporator control is included in a central control panel.

Benefits:

- Handles chlorine and sulphur dioxide
- Water temperature thermostatically controlled
- Electrical interlock of all safety arrangements
- Automatic pressure reducing and shut-off valve protects gas feeder from liquid entry

THEORY OF OPERATION

Liquid gas enters at the top of the vapourising cylinder, but a dip tube extends from the liquid inlet almost to the bottom. The gas outlet at the top has a short drop pipe. This arrangement allows liquid chlorine to enter near the bottom and gas to be withdrawn from the top. Thus the gas chamber pressure is limited to that which exists in the source container. Heat transfer from the water bath heats the liquid and superheats the gas. In addition, the valve at the gas outlet reduces pressure to increase superheat and to prevent reliquefaction beyond the valve.

The liquid level in the vapourising cylinder adjusts to the gas withdrawal rate. When this rate is constant, the liquid level remains constant. If the withdrawal rate is increased, gas pressure in the cylinder is reduced and the liquid rises because of the supply pressure. This exposes more liquid to the transfer surface and it evaporates faster. The gas pressure builds up until it equals the supply pressure and the liquid level reaches equilibrium. A reduction in the gas withdrawal rate has the opposite effect.

The water bath temperature is maintained constant regardless of the rate of evaporation. A thermostat is provided for keeping the bath water temperature at 71 °C. High and low temperature alarm switches signal any malfunction of the temperature control system. From the evaporator, the gas flows to an electrically or pneumatically operated pressure reducing and shut-off valve which is adjusted to provide the desired operating gas pressure for the gas control unit.

Automatic safety features

- Liquid level in the vapourising cylinder is selfadjusting, in accordance with the need for more or less heat transfer surface
- The liquid-inlet line is protected by a rupture disc arrangement designed for a pressure of 14.5 bar or optionally for 22 bar (hot climate). Combined with an expansion cylinder and a contact pressure gauge this unit protects the liquid gas supply line
- An automatic pressure reducing and shut-off valve combined with a minimum contact pressure gauge and interlocked with a low water temperature alarm switch prevents reliquefaction downstream of this valve
- A maximum contact pressure gauge in the evaporator outlet protects the vapourising cylinder in the case of an operators error (manual inlet and outlet valves closed, heaters on)

TECHNICAL DATA

Standard capacities: 200 kg Cl_2/h; 100 kg SO_2/h

Power consumption: approx. 18 kW

Power supply: 3/N/PE AC 400/230 V, 50 Hz
Other voltages: consult

Water connections:
3/4 " for make-up water (city water quality)
1 " for overflow and drain
1 " vent to the atmosphere

Gas inlet and outlet connection:
1 " threaded flange PN 40, DN 25

Dimensions (B x H x T): 730 x 1600 x 402 mm

Space required for installation:
Room height min. 2800 mm plus additional space for lifting device 800 x 1700 mm (B x T)

Foundation required: 800 x 800 x 100 mm

Weight:
Unit installed: 650 kg
Shipping weight: 500 kg

Installation and maintenance

In accordance with local regulations relating to chlorination systems, every new installation must be checked and tested by an approved expert prior to its start-up. This applies also to regular inspections. We recommend to have these services carried out by our specially trained technicians.

evoqua
WATER TECHNOLOGIES

Auf der Weide 10, 89312 Günzburg, Germany
+49 (8221) 804-0 www.evoqua.com

4.2 Flashing Lightalarm

Wallace & Tiernan®

an EVOQUA brand

Flashing light klaxon Part Number W2T505061

For optical and acoustical warning for wall mounting, Ambient temperature: - 20…+50 degree.
Flashing frequency: approx.. 1 Hz
Colour of unit: red
Capacity: 92 dB (A)
Operation: 100% ED
Enclosure: IP 33
Rated current: 30 mA
Powar supply: 230 VAC

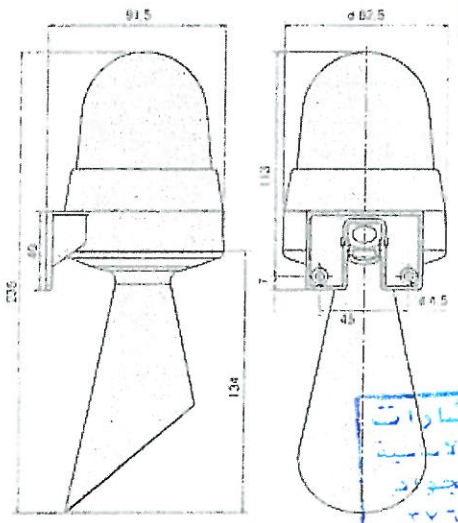

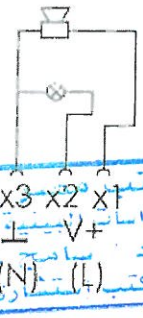

Technische Daten:

Einschaltstrom:	starting current	< 1 A	
Lautstärke max:	volume max	98 dB(A) / 1 m	
Tonfrequenz:	tone frequency	110 Hz	
Tonart:	tone type	Dauerton	continuous tone
Einschaltdauer:	duty cycle	100 % ED	
Material Gehäuse:	housing material	Polycarbonat, grau	Polycarbonate, grey
Material Kalotte:	dome material	Polycarbonat, transparent	Polycarbonate, transparent
Einbaulage:	installation position	Schallöffnung nach unten	sound exit facing downwards
Gewicht ca.:	weight approx.	185 g	
Temperatur:	temperature	-20° ..+50°C	
Schutzart:	protection rating	IP65 in montiertem Zustand	IP65 when mounted
Befestigung:	fixing	Winkelmontage	Bracket mounting

Evoqua Water Technologies Ltd
One60 London Road, Sevenoaks
Kent . TN13 1BT, UK

Telephone: +44 (0) 1732 771777
Facsimile: +44 (0) 1732 771800

4.3 Chlorine Residual Analayser Controller

evoqua
WATER TECHNOLOGIES

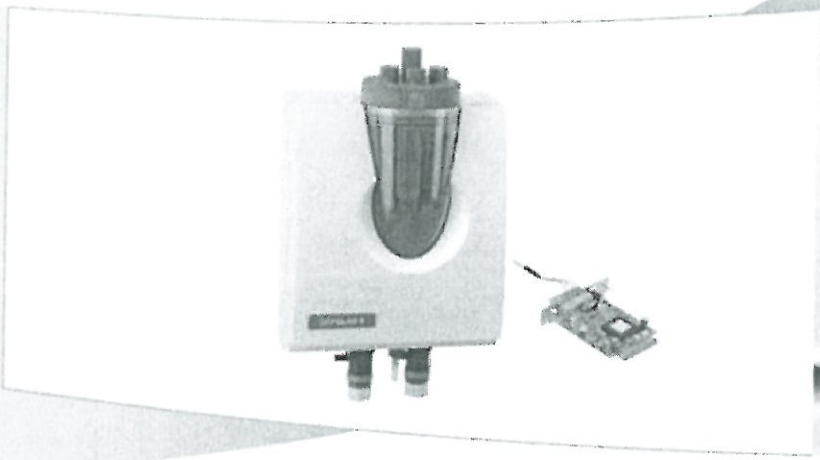

DEPOLOX® 5 BARE ELECTRODE FOR CL2, O3, CLO2 OR KMNO4

WALLACE & TIERNAN® ANALYZERS/CONTROLLERS

The DEPOLOX® 5 measurement module can be used with either the SFC electronic package for single point analysis and control or the versatile MFC electronic package for multiple measurements and control. It consists of a plug-in sensor card and flow cell with an integral, bare-electrode measurement configuration. Utilizing amperometric residual measurement technology, it is suitable for disinfection applications, ranging from simple measuring/monitoring tasks to complex control processes for treating potable water, process water, and pool water. For a pH corrected free chlorine measurement with a single SFC unit a SiDiSens module is available.

Typical applications

- Measurement and control tasks in potable water works
- Process water monitoring in all water-based industrial processes
- Cooling water monitoring

Features

The DEPOLOX® 5 flow cell consists of a 3-electrode system utilizing a bare-electrode design which provides a quick response time (90 % change < 20 sec.) with high accuracy (±2 % F.S.) when compared to membrane sensor technology. Hydrodynamic grit cleaning of the electrode surfaces maintains sensitivity to extend the intervals between calibrations. Zero point calibration is not necessary. A sample with a constant pH is required, however, the addition of a pH sensor can provide for compensated free chlorine measurement with the suitable electronic package. An integral multi-sensor provides a PT 1000 temperature measurement and monitors sample flow to provide a loss-of-flow alarm contact. The flow cell is supplied with a 1 m (3.3 ft.) screened coaxial cable. Up to three additional sensors can be fitted into the flow cell for measuring other water parameters.

Key Benefits

- Accurate measurement and high reproducibility
- Fast response time to meet fluctuating disinfection demands
- Rugged design and minimal maintenance due to hydrodynamic cell cleaning
- Economical, reagentless operation
- Proven operation in thousands of installations around the world
- Intuitive programming for user-friendly operation

Utilizing "plug and play" technology allows the SFC or MFC controller to automatically recognize the sensor card and provide the correct display information. An analog output (0/4 to 20 mA) is available along with user configurable alarm contacts.

DEPOLOX® 5 MEASURING CELL

Measuring system: Pot. 3-electrode system
Electrolyte: Potassium chloride solution, 3 mol
Measuring signal: max. 1000 µA
Measuring range (DEPOLOX 5) for SFC/MFC systems:
max. 50 mg/l with a typical measuring signal 20 µA per mg/l
Typical output signal: approx. 20 µA/mg/l free Cl_2
Resolution:
up to 500 µg/l: 1 µg/l; up to 5 mg/l: 0,01 mg/l; up to 50 mg/l: 0,1 mg/l; up to 200 mg/l: 1 mg/l

Response time: < 20 sec.
Conductivity: min. 200 µS/cm
Enclosure sensor connection:
IP 66, designed to meet NEMA 4X
Temperature compensation:
yes, with Pt 1000 (0 - 50 °C)
pH compensation: yes, in combination with SFC-pH (Cl⁺⁺) or pH sensor
pH range 5.0 - 8.5 according to HOCl curve
Cross-sensitivity:
other oxidation agent: copper based algaecide

Water quality:
pool, potable, industrial and process water; no use by presence of organic chlorine/stabilisation agents

DEPOLOX® 5 FLOW MODULE

Sample water connection:
PVC hose 6 x 3 mm or sample water connection PE hose 6 x 1 mm, thread connection 1/2

Flow rate: 33 l/h (0.15 US gpm), controlled
Sample water temperature: 0 -50 °C (32 - 122 °F)
Allowable sample water pressure: min. 0.2 - max. 4.0 bar (3 - 60 psi)
Back pressure: max. 1.5 bar (pressurized version)
Weight: approx. 1.5 kg (3.3 lbs)
Dimensions:
215 x 375 x 155 mm (8.4 x 14.8 x 6.1")

Note
integrated DEPOLOX 5 sensor, other sensors possible

Flow module	View	Slots, non-p.	Slots, pressurized	Technical data
DEPOLOX5 flow-through adapter with integrated, open sensor for oxidation and disinfection chemicals and compatible with additional measurements of the MFC/SFC series.		 5 slots	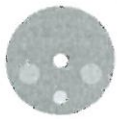 4 slots, 1.5 bar (22 psi) back pressure	Sample water flow: controlled to 33 l/h with max. 4 bar inlet pressure * integrated multi-sensor with flow-monitor and compatible with temperature sensor max. sample water temperature +50 °C

● MEMBRANE SENSOR ● PH/REDOX SENSOR ● SENSOR FOR FLUORIDE OR CONDUCTIVITY

*: SAMPLE WATER PRESSURES OF UP TO 40 BAR (580 PSI) CAN BE ADAPTED WITH SPECIAL EQUIPMENT

evoqua WATER TECHNOLOGIES

Auf der Weide 10, 89312 Günzburg, Germany
+49 (8221) 904-0 www.evoqua.com

evoqua
WATER TECHNOLOGIES

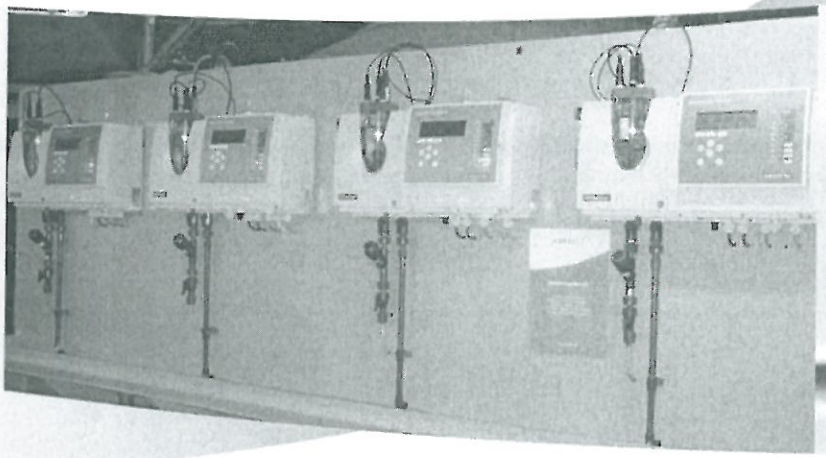

WALLACE & TIERNAN® ANALYSERS AND CONTROLLERS

SFC PC PROCESS CONTROLLER

The SFC PC system controls on the basis of a controlled variable (e.g. a flow signal) and an actual value signal. The actual value signal can be an external mA signal. Thanks to the fuzzy technology, compound loop control with flow rate and access to the controlled process variable (e.g. chlorine) results in significantly improved control. The SFC PC system saves its reactions to control deviations permanently and uses this data as a basis for future deviation control. This allows the control variables to be balanced optimally with the flow and the control parameters. The process controller SFC PC rounds off the SFC series which measures and controls various parameters, including free chlorine, chlorine dioxide, ozone, fluoride, redox and pH value.

APPLICATIONS AND EXAMPLES

Compound loop control is ideal for disinfection control as well as the control of other chemical parameters in:

- Potable water treatment plants
- Cooling water circuits
- All types of industrial/process water applications

FEATURES

- Simple firmware updates using an SD card or RS 232
- RS 485 port, CAN sensor/actuator bus interface and slot for fieldbus systems

OPTIONS

- The SFC PC functions can be integrated in any SFC measuring system (see separate data sheets).

KEY BENEFITS

- Supports up to four control modes, including process optimised, adaptive control and setpoint trim mode
- Very precise control, preventing over or underfeed
- Adjustable measuring range and units
- Easy to operate thanks to intuitive menu navigation and clear, easy-to-read display, diagnostics menu to simplify maintenance
- Galvanically isolated inputs and outputs

SFC electronic module	
Display	Back-lit LCD display, resolution 128 x 64 pixels
Measurement input	3 x 0/4 - 20 mA for measured value input, external setpoint, flow
Input feedback	for position feedback 0/4 - 20 mA or 0 - 1 V or 1 kΩ, 5 kΩ potentiometer
Digital inputs	2
Switching outputs	max. 4 alarm contacts/controller outputs
Analog output	0/4 - 20 mA, Load ≤ 500 Ohm Load monitoring Accuracy < 0.5 % FS Galv. isolated up to 50 V relative to earth
Interfaces	RS 485 port for connection to a ChemWeb Server, OPC Server, CMS software, CAN sensor/actuator bus interface, RS 232 for firmware updates and slot for field bus modules

Power supply	24 V DC or 100 - 240 VAC, 50/60 Hz
Ambient temperature	0 - 50 °C (32 - 122 °F)
Enclosure	IP66
Installation options	Wall-mounted in enclosed rooms or rack-mounted
Weight (incl. packaging)	approx. 2.5 kg (5.5 lbs)
Dimensions (W x H x D)	185 x 265 x 145 mm (7.3 x 10.4 x 5.7")
Testing and marking	Conforms to CE; Inspected for EMC Testing and marking in accordance with EN 61326; Tested for electrical safety in accordance with EN 61010 UL/CSA approved
Extras	Real-time clock, battery operated Flash-Memory (max. 512 kB, 20 kB RAM)
SD card, optional	30 days trend for two measurands

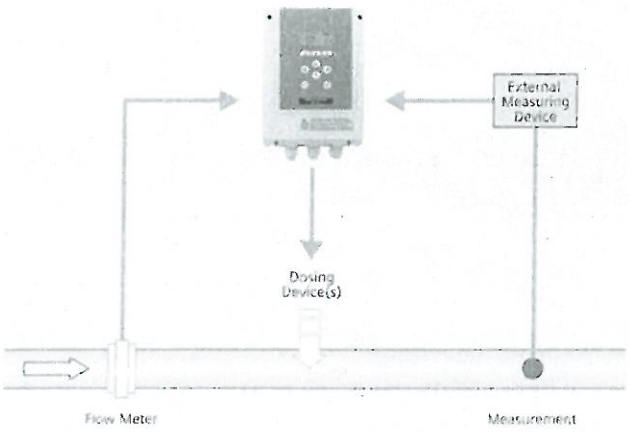

COMPOUND LOOP CONTROL WITH MIT SFC PC

Compound loop control is a combination of a flow proportional control with additional single feedback closed loop control to correct control deviations.

evoqua
WATER TECHNOLOGIES

One60 London Road, Sevenoaks, Kent, TN13 1BT, United Kingdom
Tel: +44 (0) 1732 771 777 Email: info.uk@evoqua.com www.evoqua.com

4.4 Liquid Pressure Relief System

Wallace & Tiernan®

an EVOQUA brand

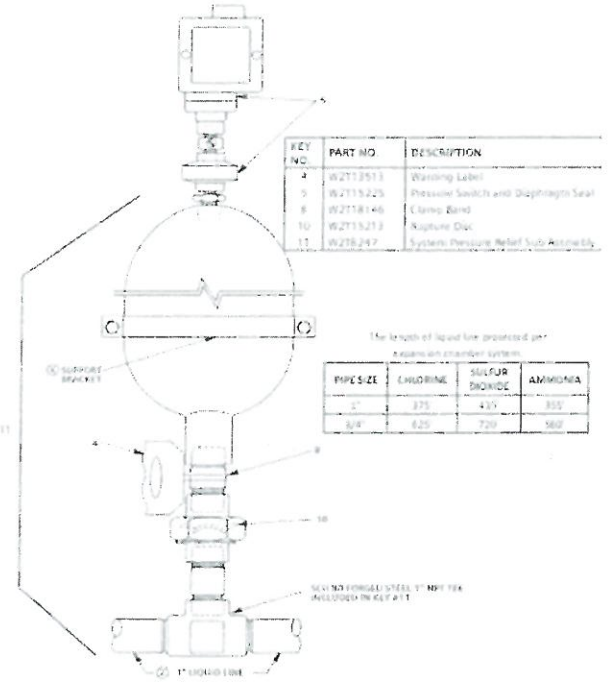

Liquid Line Pressure Relief System Part Number W3T99062

Lliquid line pressure relief system series 50-200 contains rupture disc, an expansion chamber, and a pressure switch. Should the liquid-inlet line be valved off accidentally and there is a rise in temperature, the disc ruptures, but the liquid is contained in the chamber. The pressure switch can be used to actuate an external alarm.

Evoqua Water Technologies Ltd
One60 London Road, Sevenoaks
Kent , TN13 1BT, UK

Telephone: +44 (0) 1732 771777
Facsimile: +44 (0) 1732 771800

4.5 Gas Pressure Reducing Valve

evoqua
WATER TECHNOLOGIES

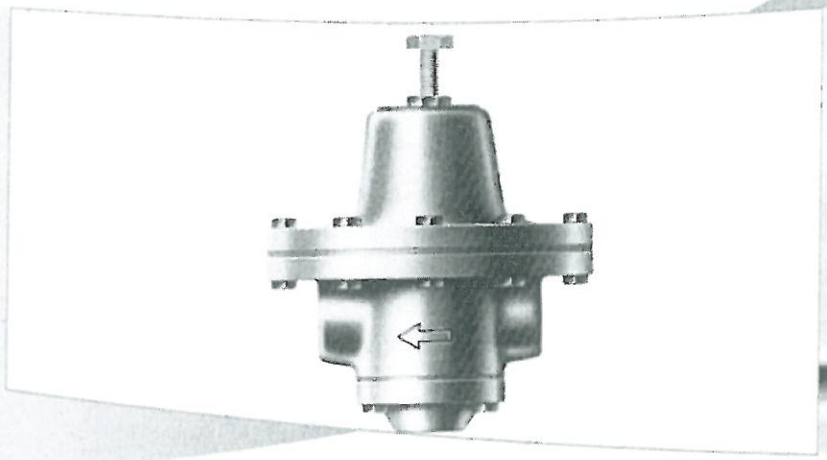

WALLACE & TIERNAN® SERIES 50-185

GAS PRESSURE REDUCING VALVE FOR CL_2, SO_2 AND NH_3

Introduction

The Series 50-185 Gas Pressure Reducing Valve (GPRV) is a spring-loaded, diaphragm operated valve used in gas-handling systems. It reduces varying gas pressure to a desired regulated pressure and maintains this pressure within close limits. When used in supply feed lines, the valve reduces the possibility of reliquefaction and improves gas regulation. For automatic operation, optional electric control components give reliable automatic shut-off.

Valve arrangements are: 1) a manual spring adjustment for pressure regulation, or 2) an electric operator for setting the regulated output and automatic shut-off.

Features

- Design simplicity and few operating parts mean a small, compact valve that is easy to install directly in a pipeline. Optional wall-mounting brackets are available for use with flexible connections.
- One valve body accommodates several seat-and-stem sizes for different capacities. The valve gives excellent regulation of discharge pressure over a flow range of 100 to 1 and a wide range of inlet pressures.
- Removable cartridges containing the seat-and-stem assemblies facilitate changing capacities and maintenance.
- Regulated gas pressure is easily set by adjusting spring load.
- All valve arrangements can handle inlet pressures to 560 psi (38.5 bar) and temperatures to 180 °F (82°C). Kynar® (vinylidene fluoride resin) for chlorine or sulphur dioxide or FEP (for ammonia) diaphragms and lead gaskets minimize the possibility of leaks. All electric operator arrangements shut off automatically if power supply fails.
- All valve body arrangements are weather-resistant for outdoor installation. The electric operator is a general purpose type and is UL listed.

Benefits

- Easy to install and maintain
- Excellent regulation of both discharge and inlet pressure
- Readily adaptable to capacity changes
- Gas pressure is easy to set
- Capacities to 12,000 PPD (chlorine), pressures to 560 PSI (38 bar) and temperatures to 180°F (82°C)
- Optional electric actuator for automatic closure of the valve
- Weather- resistant for outdoor installation

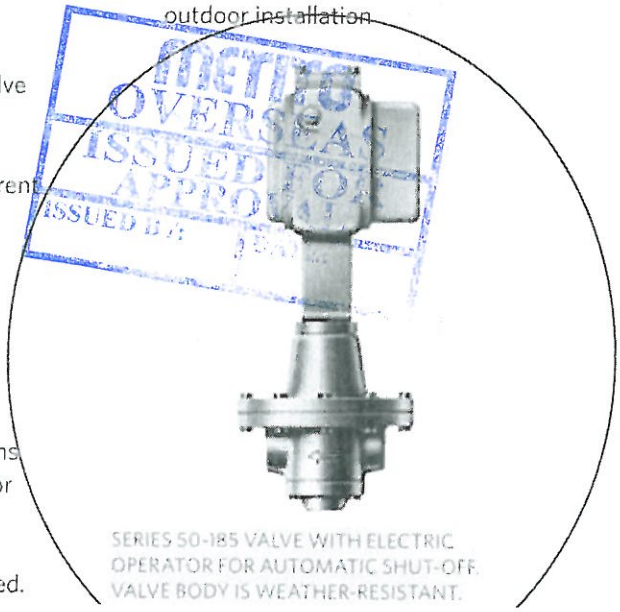

SERIES 50-185 VALVE WITH ELECTRIC OPERATOR FOR AUTOMATIC SHUT-OFF. VALVE BODY IS WEATHER-RESISTANT.

Operation

Regulated gas pressure is achieved by a balanced-diaphragm system. As supply pressure increases, pressure against a diaphragm builds up. When this pressure overcomes the spring compression opposing it, the diaphragm moves.

Diaphragm movement positions the stem assembly closer to the seat, throttling the supply pressure until it balances the spring compression. When the discharge pressure balances the spring compression, the desired regulated pressure results.

The desired control pressure, thus regulated pressure, is set by manually adjusting the compression of the spring, or by manually adjusting a mechanical stop, which limits actuator-ram travel in the electrically operated version. Automatic shut-off is achieved by de-energizing the electric valve operator.

Construction

The Series 50-185 Gas Pressure Reducing Valve consists of a main housing, convenient inlet and outlet connections, spring-loaded stem assembly, seat, and reinforced power diaphragm. For manually set and electrically operated models, the operator housing contains an adjustable spring.

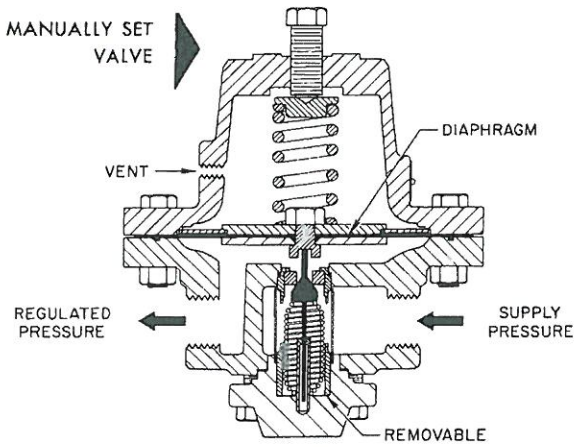

TECHNICAL DATA

Use	To reduce the pressure of chlorine, ammonia or sulphur dioxide in piping systems.
Capacity*	Cartridge-type seat-and-stem assemblies available for 2,000 (908 kg) and 12,000 lbs (5,443 kg) of chlorine, 975 (442 kg) and 5,760 lbs (2,613 kg) of ammonia, 1,900 (862 kg) and 9,500 lbs (4,309 kg) of sulphur dioxide per 24 hrs.
Electrical requirements	For electric shut-off: 120 volt, 50/60 Hz, single phase. Opening: 1.25 A; holding: 0.07 A; closing: none
Auxiliary switch	Rating, 22 amps at 120/240 volts
Operating range	100 to 1
Inlet pressure	560 psi (38.5 bar) maximum
Regulated output	5-60 psi (0.3 - 4 bar) for manual type; 5 to 35 psi (0.3 - 2.5 bar) for electric operator arrangement
Materials	Cast nodular iron body with corrosion-resistant finish. Other parts exposed to gas: Monel®, Hastelloy® C, Kynar®, FEP, tantalum, TFE
Connection sizes	Similar systems measure gas flow through Series V-2000 automators, ammoniators, and carbon dioxide feeders
Installation	Can be mounted directly in pipe line or with optional wall mounting brackets. All arrangements of the valve may be installed at any angle up to 90 degrees from the normal vertical. Operation will remain satisfactory and reliable, but the frequency of cleaning increases as the installation angle departs from the normal vertical.
Equipment furnished	Items such as piping and wiring are included with the valve only as specifically listed in a quotation.

Weight	NET	SHIPPING
Manual	32 lbs (14.5 kg)	40 lbs (18 kg)
Electric	56 lbs (25 kg)	66 lbs (30 kg)

* HIGHER CAPACITY FEEDS ARE ACHIEVABLE ONLY IF TEMPERATURE OF LIQUID IS MAINTAINED AT 70°C (100 PSIG) AND GPRV OUTLET PRESSURE SET TO 35 PSIG

evoqua WATER TECHNOLOGIES

One 60 London Road, Sevenoaks, Kent, TN13 1BT, United Kingdom

Tel: +44 (0) 1732 771 777 Email: info.uk@evoqua.com www.evoqua.com

4.6 Vaccuum Regulator

evoqua
WATER TECHNOLOGIES

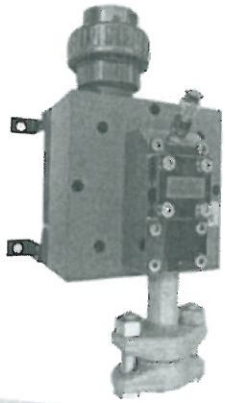

DISINFECTION SYSTEMS VACUUM REGULATOR

INTRODUCTION

The Vacuum Regulator manufactured by Evoqua Water Technologies operates as a pressure reducing valve to transfer gas under vacuum within the dosing system. The Regulator functions only when a vacuum is present and shuts off safely, in the event of vacuum failure.

Design and Operation

The Vacuum Regulator consists of a sealed cavity with a diaphragm, gas inlet valve, vacuum outlet, high pressure vent and vacuum status indicator.

With a vacuum supplied to the cavity, the diaphragm is pulled towards the back of the Regulator and opens the gas inlet valve.

In the event of vacuum failure, an opposing spring returns the diaphragm to its original position and reseals the gas inlet valve.

If the supply of gas fails on any of the Regulators, the diaphragm pulls a sealing 'O' ring onto the back of the Regulator. This acts as a high vacuum shut off and prevents moisture from being pulled from the cylinder into the supply pipework. The vacuum status indicator shows the status of the unit if either of the above failures occur.

In the event of the gas inlet valve letting gas through when there is no vacuum, the excess gas passes to a vent which releases it safely to an external atmosphere.

Key Benefits

- Range of four units with capacities up to 250 kg/hr (13,200 ppd)
- Shuts off gas supply in the event of a vacuum failure
- Durable components
- Indication of state of gas supply
- Does not require an auxiliary pressure reducing valve
- Suitable for chlorine, sulphur dioxide or ammonia gas
- Units incorporate an integral pressure relief valve
- Low part count construction for low maintenance

PRODUCT DIMENSIONS

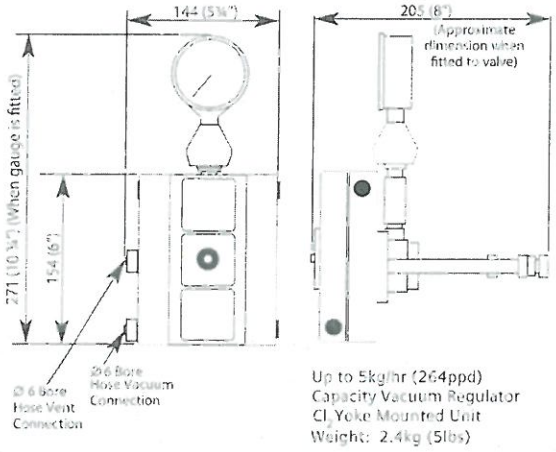

Up to 5kg/hr (264ppd) Vacuum Regulator

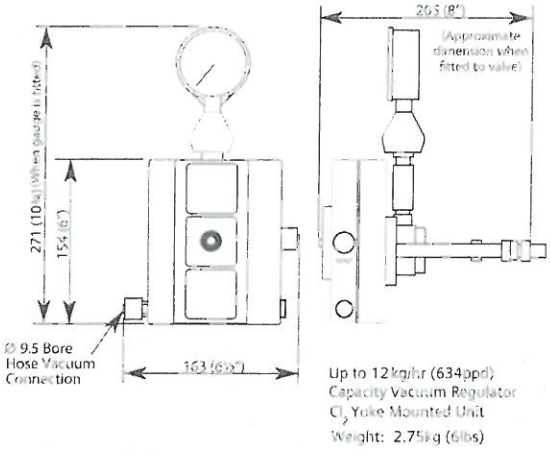

Up to 12kg/hr (634ppd) Vacuum Regulator

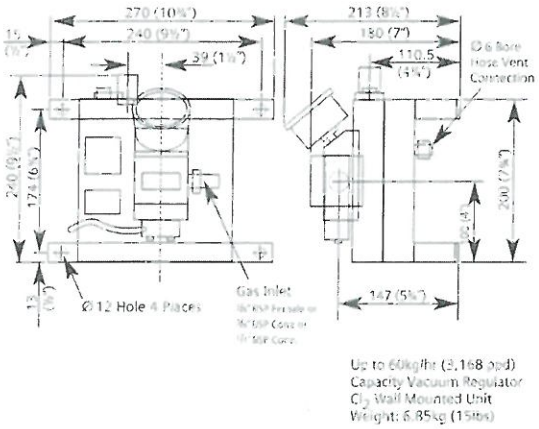

Up to 60kg/hr (3,168ppd) Vacuum Regulator

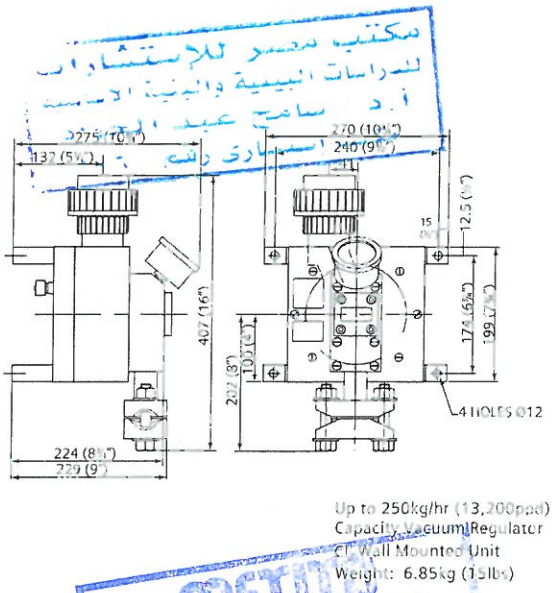

Up to 250kg/hr (13,200ppd) Vacuum Regulator

Not to scale

GENERAL SPECIFICATION

The Vacuum Regulator will regulate the supply of pressurized; chlorine, sulphur dioxide or ammonia gas into a vacuum dosing system at a rate of up to 5, 12, 60, or 250 kg/hr (264, 633, 3,168, 13,200ppd). The Vacuum Regulator is manufactured by Evoqua Water Technologies

The Regulator consists of a sealed cavity, diaphragm and opposing return spring, gas inlet valve, vacuum outlet, high pressure vent and vacuum status indicator.

In the event of high vacuum caused by gas supply failure the Regulator will seal off the vacuum from the supply.

In the event of vacuum failure the return spring safely shuts off the gas supply inlet valve.

If gas pressure occurs in the vacuum cavity it will be vented safely to an external atmosphere.

Option 1:
5, 12, or 60 kg/hr (264, 633, 3,168ppd) versions
A heater will ensure that the supply of gas does not condense in the dosing system.

Option 2:
5, 12, or 60 kg/hr (264, 633, 3,168ppd) versions
A manual isolating valve will enable the Regulator to be shut off from the gas supply.

Option 3:
(5, 12, or 60 kg/hr (264, 633, 3,168ppd) versions)
A pressure gauge will be fitted to the Regulator to indicate gas supply pressure.

Option 4 mounting configurations

Size (kg/hr)	Cylinder Mounted	Yoke Mounted	Wall Mounted
5 (264 ppd)	▪	▪	▪
12 (633 ppd)		▪	▪
60 (3168 ppd)			▪
250 (13,200 ppd)			▪

TECHNICAL DATA

Up to 5 kg/hr (264ppd) capacity (basic build)

Capacity	Up to 5 kg/hr (264ppd)
Overall dimensions	See drawing
Power requirements	240v or 110v 50/60Hz for heater
Operating temperature	0 - 50°C (32°F - 122°F)
Pressure rating	16 bar (232psi)
Connections	Vacuum 10mm (½") bore EVA tube; Vent 10mm (½") bore EVA tube
Display	Loss of vacuum, loss of gas
Vacuum Regulator	38 mm Hg - 28mm H

Up to 12 kg/hr (633ppd) capacity (basic build)

Capacity	Up to 12 kg/hr (633ppd)
Overall dimensions	See drawing
Power requirements	240v or 110v 50/60Hz for heater, 6VA heater when fitted
Operating temperature	0 - 50°C (32°F - 122°F)
Pressure rating	16 bar (232psi)
Connections	Vacuum 10mm (½") bore EVA tube
Display	Loss of vacuum, loss of gas

Up to 60 kg/hr (3,168ppd) capacity

Capacity	Up to 60 kg/hr (3,168ppd) **
Overall dimensions	See drawing
Weight	6.85 kg (15lbs)
Power requirements	240v or 110v 50/60Hz for 6w heater
Operating temperature	0 - 50°C (32°F - 122°F)
Pressure rating	16 bar (232psi) maximum
Connections	Vacuum 3/4" (20mm) solvent cement spigot, gas 3/4" BSP female
Display	Pressure gauge 16 bar (232psi) maximum

** Up to 80kg/h with manually set gas feed rate, needs adaptor kit.

Up to 250 kg/hr (13,200 ppd) capacity

Capacity	Up to 250 kg/hr (13,200ppd)
Overall dimensions	See drawing
Weight	6.85kg (15lbs)
Power requirements	None
Operating temperature	0 - 50°C (32°F - 122°F)
Pressure rating	16 bar (232psi) maximum
Connections	Vacuum 2" NB socket union uPVC, gas supply 1" NPT ammonia union

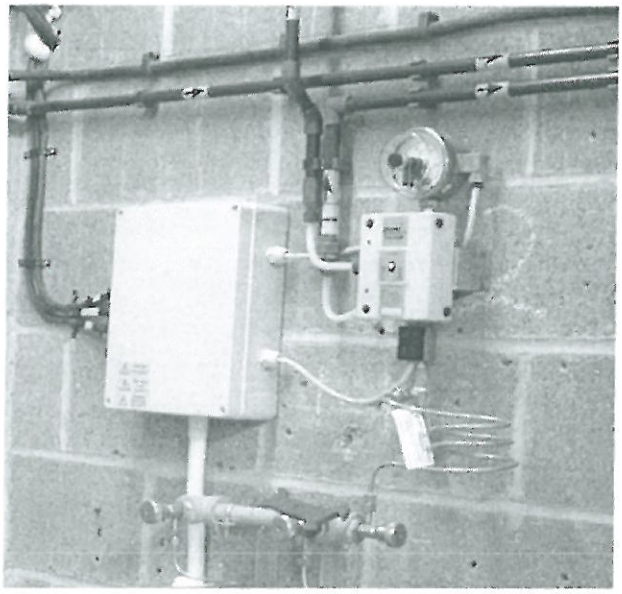

5kg/hr (264ppd) vacuum regulator

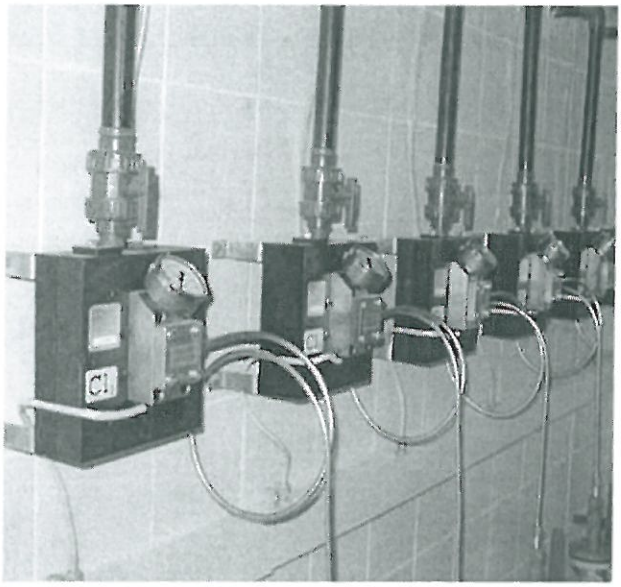

60 kg/hr (3,168ppd) vacuum regulator

evoqua
WATER TECHNOLOGIES

Cire60 London Road, Sevenoaks, Kent, TN13 1BT, United Kingdom

Tel: +44 (0) 1732 771777 Email: info.uk@evoqua.com www.evoqua.com

4.7 Pre and Post Chlorinators

evoqua
WATER TECHNOLOGIES

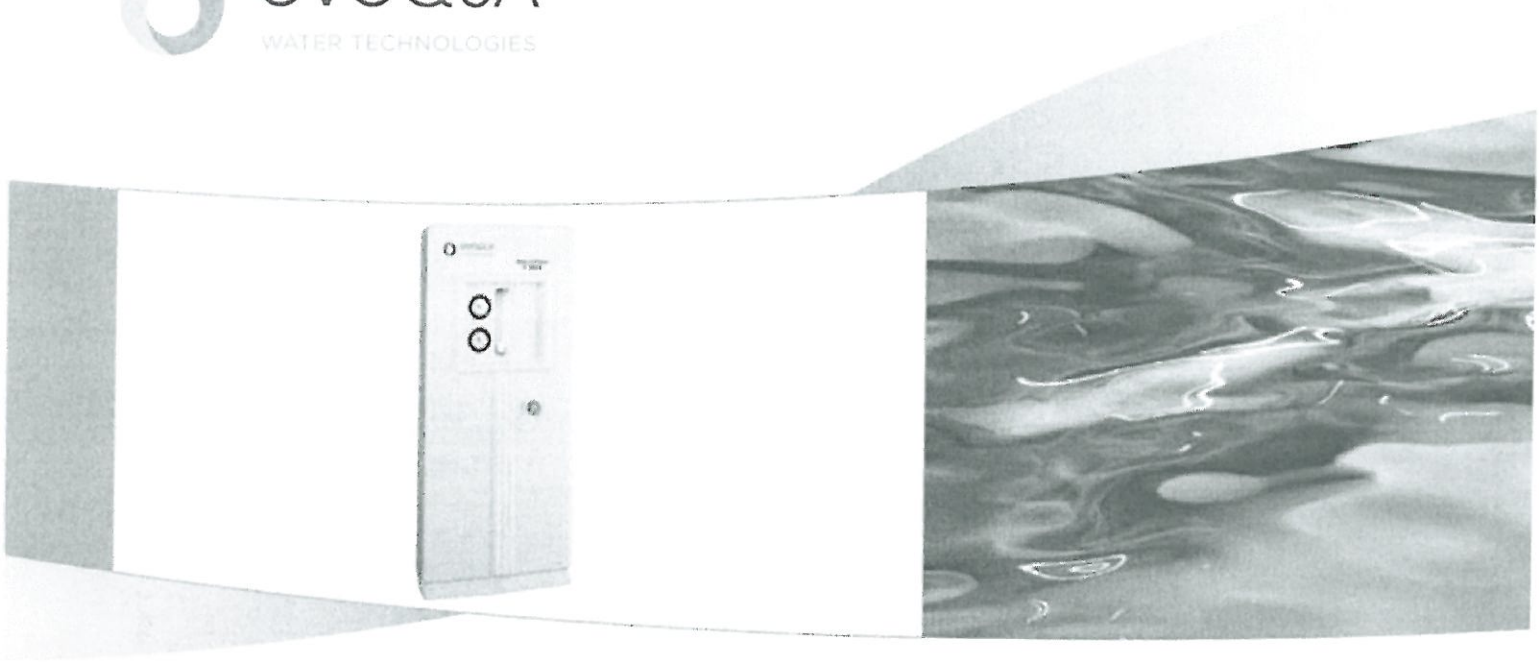

V-2020, V-2030 CHLORINATOR

WALLACE & TIERNAN® GAS FEED SYSTEMS

The remote vacuum chlorinators V-2020 and V-2030 incorporate a world-wide tried design and function proven over decades and provide a multitude of configurations. Their usage is ideal for applications where high feed rates are required. The maximum feed rate for V-2020 systems is 40 kg/h, for V-2030 systems up to 200 kg/h chlorine. With minor modifications in material, both units can also be used as a gas feeder for sulphur dioxide (SO_2) and carbon dioxide (CO_2).

The all-vacuum chlorinators V-2020 and V-2030 are gas control units of the solution feed type. At an injector the metered gas is dissolved in water, and the resultant solution is discharged to the point of application. Feed rate control is achieved by changing the position of the V-notch plug. The plug provides ease of adjustment and excellent repeatability of the feed rate set.

The all-vacuum principle means there is vacuum from the vacuum regulator/check unit up to the injector. There are no lines or components in this chlorinator carrying gas under pressure. In the case of a loss of vacuum, no gas can leak out, but air will leak in.

OPERATION

Chlorine gas under pressure flows from the chlorine container via a steel manifold to the vacuum regulator/check unit. This diaphragm-operated vacuum regulating valve reduces the gas pressure to a vacuum at once and will only open beyond a factory-set operating vacuum which is produced by the injector. Dry gas passes the vacuum safety valve and enters the control unit where it causes the rotameter's float to rise. The level of the float indicates the gas feed rate directly in kg/h. Having passed the V-notch orifice, the gas moves through the differential regulating valve which maintains a constant differential across the V-notch. The constant

Key Benefits

- Flexible floor-mounted gas feeder
- Proven technology, excellent reliability and long service life
- Reliable V-notch gas-flow control and precise metering
- Direct-reading rotameters with high resolution and readability
- Serviceability – components easily accessible

Features

- Operating range for automatic control mode 1 : 20
- Differential regulating valve for precise feed rate control and efficient injector operation at low vacuum levels
- Vacuum gauges indicate injector vacuum and system vacuum
- Conversion kit for automatic control available (electric

varying conditions of the injector operating pressure. As an accessory to the differential regulating valve, a vacuum relief valve trims a too powerful injector vacuum. The operating vacuum required for the aspiration of the chorine gas is produced by a remote mounted aspirator-type injector. In the injector the gas is thoroughly mixed with water, and the resultant solution is discharged to the point of application. When the injector water supply is shut off, a check valve closes the injector suction part and prevents injector water from backflooding the control unit. Simultaneously the spring-operated vacuum regulator/ check unit closes automatically due to the absence of vacuum and cuts off the gas supply.

TECHNICAL DATA

Methods of control:

Manual control:

The feed rate adjustment is turned manually to position the V-notch variable office.

Start-Stop or program control:

Feed rate adjustment is manual. Start-Stop is achieved by electrical auxiliary contacts controlling a solenoid valve or motorised valve installed in the operating water supply line.

Automatic control:

The feed rate adjustment is achieved by an electric positioner.

Direct residual control

A set-value controller incorporated in the SFC system residual analyser maintains a desired residual.

Flow-proportional control

By means of a SFC SC ratio controller the electric positioner of the chlorinator is paced to the water flow rate Q. The dosage factor can be set to scale the flow input signal from 0 to 200 %.

Compound loop control

This mode of control combines flow-proportional and residual control by means of the SFC PC process controller. It provides automatic positioning of the chlorine feed rate proportional to the flow rate and chlorine residual.

Automatic Positioner:

- Manual override of the modes manual/automatic by simply pulling a knob.
- Internal feedback potentiometer for precise operation with the SFC SC or SFC PC controllers.

Accuracy: ± 4 % of the indicated flow

Operating range: 1 : 20 for any range

Operating temperature: + 10 ºC to + 50 ºC

CAPACITIES:

V-2020	V-2030
0.5 - 10 kg/h Cl_2	1.0 - 20 kg/h Cl_2
1.0 - 20 kg/h Cl_2	2.0 - 40 kg/h Cl_2
1.5 - 30 kg/h Cl_2	3.0 - 60 kg/h Cl_2
2.0 - 40 kg/h Cl_2	4.0 - 80 kg/h Cl_2
	6.0 - 113 kg/h Cl_2
	8.0 - 158 kg/h Cl_2
	10.0 - 200 kg/h Cl_2

In addition to chlorine, the systems are available for other gases: SO_2, CO_2

MAXIMUM INJECTOR INLET PRESSURE:

V-2020:

2 " PVC Injector:	9 bar - 38 °C	4,5 bar - 54 °C
2 " Bronze Injector:	17,5 bar - 38 °C	9 bar - 54 °C
3 " Rubber lined steel injector:	12 bar - 38 °C	6 bar - 54 °C

V-2030:

3 " Rubber lined steel injector:	12 bar - 38 °C	6 bar - 54 °C
4 " Rubber lined steel injector:	12 bar - 38 °C	6 bar - 54 °C

Injector operating water:

Pressure and flow depend on maximum feed rate, back pressure at the point of application and head loss in the chlorine solution discharge line. The adjustable injector allows manual control of optimal water flow to meet actual operating conditions.

Dimensions (W x H x D): 730 x 1600 x 402 mm

Shipping weight: 60 kg

evoqua
WATER TECHNOLOGIES

Auf der Weide 10, 59312 Giesburg, Germany
+49 (8221) 904-0 www.evoqua.com

4.8 Changeover Unit

evoqua
WATER TECHNOLOGIES

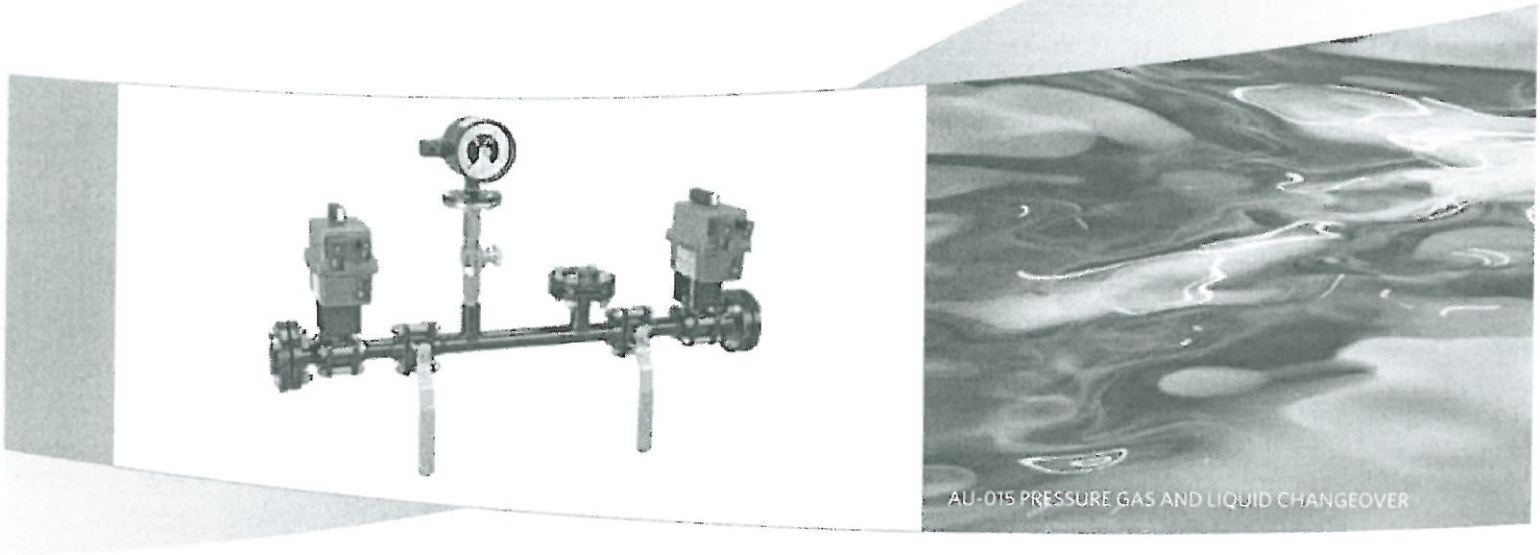
AU-015 PRESSURE GAS AND LIQUID CHANGEOVER

V-015, A-015, AU-015 AUTOMATIC CHANGEOVER MODULES WITH CCU

WALLACE & TIERNAN® GAS FEED SYSTEMS

Proper disinfection of potable, pool and process water with gaseous or liquid substances is guaranteed only if the supply of these chemicals remains uninterrupted. Various automatic changeover modules are available for this purpose. Once a storage container reaches a specific low level, this module switches to the next available full tank. This means all available chemicals are optimally utilised.

V-015 vacuum changeover

The electrical V-015 changeover module is designed for the alternate switching of gas cylinders in vacuum gas lines. This changeover module primarily consists of a motor-driven 2 or 3-way valve, an underpressure contact gauge and an electronic CCU control unit. If the underpressure in the supply system increases to approx. -400 mbar, the changeover process is initiated by a contact on the underpressure gas gauge. An electrical positioner (servomotor) carries out the actual changeover. The motor-driven V-015 changeover valve is also available without directly attached contact pressure gauge (special model).

A-015 pressure gas changeover

The A-015 changeover module is designed for switching gas cylinders in pressure gas lines. This cylinder changeover module consists of a motordriven 2 or 3-way valve, an underpressure contact gauge and an electronic changeover valve, all of which are controlled by the CCU control unit.

AU-015 pressure gas and liquid changeover

The changeover module AU-015 is designed for liquid and gaseous chlorine or sulphur dioxide. It consists of an overpressure contact gauge with check valve as well as two motor-driven and two manually operated full-bore ball valves for the alternate evacuation of the connected gas cylinders. The motorised valves are actuated by the CCU control unit. The changeover pressure is set at the

Benefits:

- Continuous chemical supply for broad range of applications
- Suitable for chlorine, sulphur dioxide and carbon dioxide and others
- Extremely safe and reliable, optimal utilisation of applied chemicals
- User-friendly, automated system; manual lever for emergencies
- Depletion limit device to avoid corrosion in the chlorine gas cylinder (A-015, AU-015)

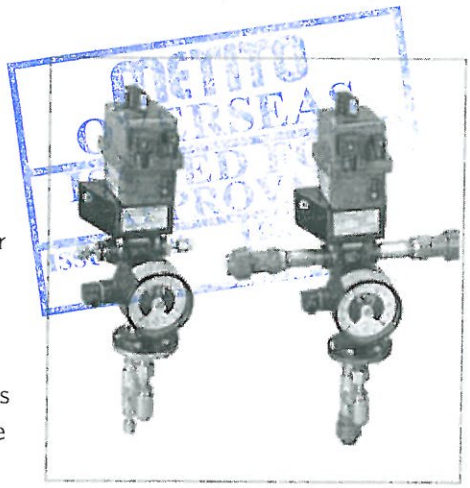
A-015 PRESSURE GAS/VACUUM CHANGEOVER

TECHNICAL DATA CHANGEOVER MODULES

	V-015	A-015	AU-015
Description	Vacuum changeover	pressure gas changeover	pressure gas and liquid changeover
Flow rate (at 20 °C)	10 kg/h Cl_2/SO_2 8 kg/h CO_2	20 kg/h Cl_2 8 kg/h SO_2	200 kg/h Cl_2/140 kg/h SO_2 (Gas) 1000 kg/h Cl_2/SO_2 (liquid)
Max. operating pressure	-	15 bar	25 bar
Changeover pressure	- 400 mbar	1 bar falling	1 bar falling
Ambient temperature	0 - 50 °C	0 - 50 °C	2 - 50 °C
Connection type	PVC tube DN 15/20	Connected to flexible line with union nut 5/8-18 UNF	R1" screwed flange acc. to DIN 2999
Electrical connection	85 - 240 V AC, DC	85 - 240 V AC, DC	85 - 240 V AC, DC
Dimensions (W x H x D)	385 x 555 x 200 mm	165 x 530 x 200 mm	875 x 600 x 265 mm
Weight	approx. 16 kg	approx. 16 kg	approx. 28 kg

ADDITIONAL GASES AVAILABLE UPON REQUEST.

contact pressure gauge. An external pressure source to check the manometer is connected to the check valve.

All changeover modules are compact units for wall mounting. The actuated valves are equipped with a lever which provides manual valve closure in the event of an emergency.

CCU control unit

The CCU control unit (Chemical Changeover Unit)controls the automatic changeover between twocylinders or tanks and thus ensures a continuous supply. One or two contact pressure gauges initiate the switching process as soon as the pressure falls below the set value. Switching can also be initiated through level contacts. The CCU consists of a plastic housing mounted to the wall and displays the operating state of the switching valves or level contacts.

Mechanical vacuum changeovers for 4 or 10 kg/h chlorine gas are available. These consist of two combinated changeover valves with filter, catchpot pressure gauge and heating element. They are also connectable to barrels or vats.

TECHNICAL DATA CCU

To connect to V-015, A-015, AU-015 or two solenoid valves:

Display:

Power supply Display for cylinder 1 and 2 (open/empty)

Digital inputs:

2 for external, voltage-free contacts (e.g. for contact pressure gauge, emergency-off signal, level switch

Output contacts:

2 voltage-free contacts (cylinder 1 empty/alarm)
2 voltage-free contacts (cylinder 2 empty/alarm)
1 voltage-free contact (cylinder 1 open)
1 voltage-free contact (cylinder 2 open)
1 voltage-free contact (to lock a chloride dioxide system)
Connection for valve heater

Power supply:

1/N/PE AC 230V, 47- 63 Hz oder 1/N/PE AC 115V, 47- 63 Hz

Type of enclosure: IP 66

Dimensions (W x H x D): 359 x 237 x 100 mm

Weight: approx. 2.4 kg

evoqua WATER TECHNOLOGIES

One60 London Road, Sevenoaks, Kent, TN13 1BT, United Kingdom
Tel: +44 (0) 1732 771 777 Email: info.uk@evoqua.com www.evoqua.com

4.9 Pre Chlorinators Controllers

evoqua
WATER TECHNOLOGIES

SFC-SERIES

WALLACE & TIERNAN® ANALYZERS/CONTROLLERS

The SFC series of instrumentation provides for the continuous measurement and control of a wide variety of water quality parameters. As a single input device, the SFC unit can be used to monitor any one of a number of different measurement technologies and perform a related control function suited to the specific application. The SFC system can control automatic v-notch positioners in gas feed systems, such as the V10k and V2000 systems, or automatic stroke length positioners and variable speed drives in dosing pump systems to maintain a setpoint concentration. With the SFC unit a second measurement is possible via the SiDiSens module, for example an additional pH measurement to allow a pH corrected chlorine measurement. For multiple measurement applications, the MFC analyzer/controller is available.

Typical applications

- Potable water treatment
- Waste water treatment
- Cooling water circuits
- Industrial and process water treatment
- Swimming pools

FEATURES

The SFC analyzer/controller is a modular system consisting of a wall or panel-mounted electronic module, a flow cell module and a plug-and-play sensor measuring module. The SFC unit can be configured as an analyzer only, with over 10 different measurement choices, a set-point or flow proportional controller or a combined analyzer/ controller. The additional control function offers an easy, software selectable range of control modes from flow proportional to compound loop with "fuzzy-logic" auto-tuning. Utilizing the CAN sensor/actuator bus allows communication between electronic modules if more than one parameter

Key Benefits:

- Permits the use of the Wallace & Tiernan® potentiostatic sensors used in the DEPOLOX® 5, Micro/2000® and Deox/2000® modules
- For use with Strantrol® ORP and Strantrol® pH measurement modules that are well proven in industrial and waste water disinfection applications
- Four different control modes can be selected
- Simple configuration and operation
- Data connection to SCADA via 4 - 20 mA output, Web technology via optional Process Monitoring System and to optional PROFIBUS® DP, PROFINET® IO or MODBUS® TCP fieldbus modules

measurement with the DEPOLOX® 5 flow cell and a pH sensor. Alternatively the pH correction can be accomplished via a SiDiSens module which allows a second measurement with a single SFC unit.

SENSOR SELECTION

The portfolio of measurements includes the following parameters, and where appropriate, the supporting measurement modules are depicted.

- Free chlorine
- Total chlorine
- Chlorine dioxide
- Ozone
- Pot. permanganate
- pH value
- Redox (ORP)
- Fluoride
- Conductivity
- Temperature
- Standard sensors/measurement with a milliamp signal

The application and water quality will determine what measurement module best suits the application.

The DEPOLOX® 5 measurement module uses the potentiostatic bare electrode technology that is fast acting to a change in chlorine concentration and therefore well suited for disinfection control. It incorporates continuous hydromechanical cleaning of the sensor.
The Micro/2000® and Deox/2000® measurement modules are also potentiostatic bare electrodes that can incorporate the addition of buffer chemicals. The Micro/2000® and Deox/2000® measurement modules can be used in poor quality water without fouling. The Micro/2000® module offers unmatched accuracy of chlorine measurements down to one part per billion. The Deox/2000® module is utilized for dechlorination chemistry measurements. The membrane measurement module utilizes membrane covered electrodes with the VariaSens flow cell and is the least affected by water supply chemistry variations. Strantrol® flowcell with proprietary HRR® sensor provides highest accuracy in ORP measurment designed for industrial applications.

FLOW PROPORTIONAL CONTROL

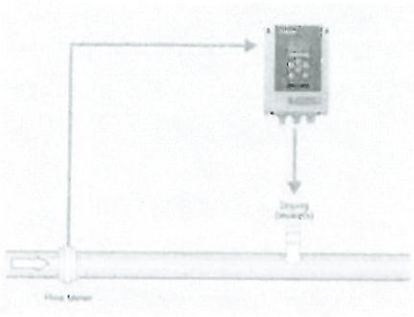

	SFC SC
External setpoint value for single feedback closed loop control and/or compi-control	–
External dosing factor for flow prop control	–
Temperature input	–
Feedback inputs	✓
2 digital inputs	✓
mA outputs	✓
Relay outputs	2
RS 232 interface for Firmware update	✓
Slot for fieldbus modules*	–
RS 485 interface	–
CAN sensor/actuator bus interface	–
SD card slot	–

CONTROL OPTIONS

Both flow proportional and compound loop control are available with the SFC. The control mode required should be specified when ordering the equipment. With the wide range of SFC versions available, nearly all conceivable water treatment applications, including single feedback closed-loop control, can be monitored and controlled.

COMPOUND LOOP CONTROL
mit Festwertregelung

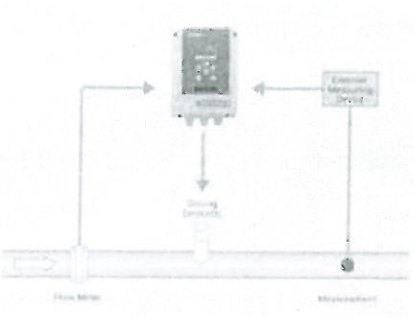

MEASUREMENT
single feedback closed-loop control

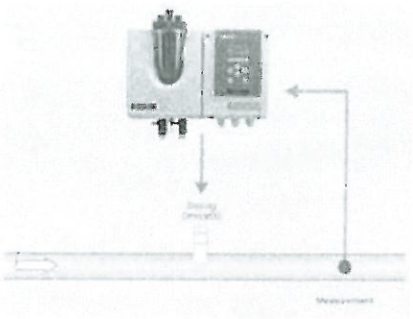

MEASUREMENT
with compound loop control

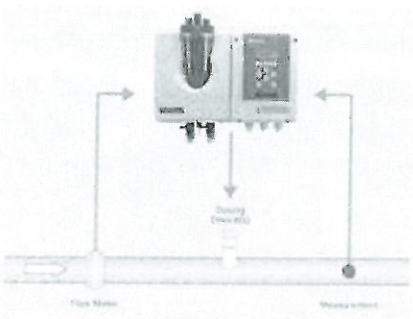

SFC PC	SFC with corresp. measuring module	SFC with corresp. measuring module & control functionality
✓	✓	✓
✓	–	✓
–	✓	✓
✓	✓	✓
✓	✓	✓
✓	✓	✓
4	4	4
✓	✓	✓
✓	✓	✓
✓	✓	✓
✓	✓	✓
✓	✓	✓

* available fieldbus modules: PROFIBUS DP, PROFINET IO, MODBUS TCP

The fuzzy logic compound loop control, which was previously included in the Wallace & Tiernan® PCU process controller, has now been integrated in the SFC PC system. Each measuring system also has an optional integrated controller that can be used with external setpoint selection (as well as with single feedback closed-loop control). Depending on the application, the control parameters can also be used to control actuators such as the V10k gas feed system, dosing pumps, or frequency converters. This now also applies to CAN sensor/actuator bus enabled dosing devices.

The flow proportional control SFC SC enables proportionally controlled feed of chemicals used in water treatment and for industrial applications. The dosing capacity of the connected device is controlled automatically, on the basis of a measuring signal, for example an external flow rate measurement, and a configurable dosing factor. If actuators with feedback are used, the non-linearity can be adjusted using a maximum of 11 calibration points.

ADDITIONAL FEATURES

The CAN sensor/actuator bus allows easy expansion of the SFC functionality by providing interconnection of two or more SFC devices. The CAN sensor/actuator bus allows for a pH compensated chlorine measurement or a more complex control scheme such a set-point trim control. The connection of field bus systems such as PROFIBUS® DP or MODBUS® TCP is by a communication slot. The removable SD card available for the SFC and SFC PC allows for data storage as well as back-up of the configuration.

TECHNICAL DATA
SFC ELECTRONIC MODULE SFC

Display:

Graphical display, resolution 128 x 64 pixels, white background illumination

Mesurement inputs:

1 x measured value input (electrically isolated up to 50 V to ground) for plug-in cards of the sensor measuring module (not with SFC SC):

- 3-electrode cell for chlorine, ozone, chlorine dioxide and potassium permanganate DEPOLOX® 5, Micro/2000® and Deox/2000® modules
- Membrane sensors for total chlorine (TC1/ TC1-S), free chlorine (FC1), chlorine dioxide (CD7), ozone (OZ7)
- pH value
- Redox voltage (ORP) with HRR® sensor or standard sensor
- Fluoride
- Conductivity
- mA/V input

1 x mA input for flow rate 0 - 20 mA/4 - 20 mA

1 x mA input for external setpoint or dosing factor 0 - 20 mA/4 - 20 mA (not applicable to SFC SC)

1 x temperature input PT 1000 (0 - 50 °C/32 - 122 °F) with sensor error display (not applicable to SFC SC/SFC PC)

1 x feedback input for servo motor position feedback (1 kΩ, 5 kΩ, mA, V)

Digital inputs:

2 x for voltage-free contact (< 100 Ω) for controller stop, flow control

Relay outputs:

4 free selectable two-way switches for process monitoring; SFC SC: 2 alarm/control contacts

mA outputs:

1 x mA output for measurement or control output (freely configurable)
Output 0/4 - 20 mA
Accuracy < 0.5 % FS
Load protected ≤ 500 Ω
Temperature drift max. 0.2 % / 10 °C
Electrically isolated up to 50 V to ground

Interfaces:

1 x RS 485 for connection to a Process Monitoring System and OPC-Server.
The RS 485 interface is electrically isolated up to 50 V to ground. 1 x CAN sensor/actuator bus interface for controlling actuators and evaluating external measurements and module communication (not applicable to SFC SC)
1 x slot for fieldbus connection: PROFIBUS® DP, PROFINET® IO, MODBUS® TCP (not applicable to SFC SC)

1 x RS 232 for firmware updates (not electrically isolated)

Memory card:

1 x SD memory card slot for installation of an SD memory card (not applicable to SFC SC)

Power supply:

100 - 240 V AC ± 10 %, 50 - 60 Hz, 30 VA
24 V DC ± 20 %, 15 W

Enclosure: IP 66, , designed to meet NEMA 4X

Testing and marking:

CE, EMC-EN 61326
IEC EN 61010
UL listed/CSA certified

Ambient temperature:

0 - 50 °C, (32 - 122 °F)
(do not expose to direct sunlight)

Storage temperature: -20 to +70 °C (12 - 158 °F)

Dimensions (W x H x D):

185 x 265 x 145 mm (7.3 x 10.4 x 5.7 ")

Weight: approx. 2.5 kg (5.5 lbs)

evoqua
WATER TECHNOLOGIES

One60 London Road, Sevenoaks, Kent, TN13 1BT, United Kingdom
Tel. +44 (0) 1732 721 777 Email: info.uk@evoqua.com www.evoqua.com

Leveraging our deep experience and proven expertise, Evoqua Water Technologies helps customers realize maximum value from their water treatment systems - from installation and optimization to ongoing service and maintenance with industry leading response times.

4.10 Post Chlorinators Contollers

evoqua
WATER TECHNOLOGIES

WALLACE & TIERNAN® ANALYSERS AND CONTROLLERS

SFC PC PROCESS CONTROLLER

The SFC PC system controls on the basis of a controlled variable (e.g. a flow signal) and an actual value signal. The actual value signal can be an external mA signal. Thanks to the fuzzy technology, compound loop control with flow rate and access to the controlled process variable (e.g. chlorine) results in significantly improved control. The SFC PC system saves its reactions to control deviations permanently and uses this data as a basis for future deviation control. This allows the control variables to be balanced optimally with the flow and the control parameters. The process controller SFC PC rounds off the SFC series which measures and controls various parameters, including free chlorine, chlorine dioxide, ozone, fluoride, redox and pH value.

APPLICATIONS AND EXAMPLES

Compound loop control is ideal for disinfection control as well as the control of other chemical parameters in:

- Potable water treatment plants
- Cooling water circuits
- All types of industrial/process water applications

FEATURES

- Simple firmware updates using an SD card or RS 232
- RS 485 port, CAN sensor/actuator bus interface and slot for fieldbus systems

OPTIONS

- The SFC PC functions can be integrated in any SFC measuring system (see separate data sheets).

KEY BENEFITS

- Supports up to four control modes, including process optimised, adaptive control and setpoint trim mode
- Very precise control, preventing over or underfeed
- Adjustable measuring range and units
- Easy to operate thanks to intuitive menu navigation and clear, easy-to-read display, diagnostics menu to simplify maintenance
- Galvanically isolated inputs and outputs

SFC electronic module	
Display	Back-lit LCD display, resolution 128 x 64 pixels
Measurement input	3 x 0/4 - 20 mA for measured value input, external setpoint, flow
Input feedback	for position feedback 0/4 - 20 mA or 0 - 1 V or 1 kΩ, 5 kΩ potentiometer
Digital inputs	2
Switching outputs	max. 4 alarm contacts/controller outputs
Analog output	0/4 - 20 mA, Load ≤ 500 Ohm Load monitoring Accuracy < 0.5 % FS Galv. isolated up to 50 V relative to earth
Interfaces	RS 485 port for connection to a ChemWeb Server, OPC Server, CMS software, CAN sensor/actuator bus interface, RS 232 for firmware updates and slot for field bus modules

Power supply	24 V DC or 100 - 240 VAC, 50/60 Hz
Ambient temperature	0 - 50 °C (32 - 122 °F)
Enclosure	IP66
Installation options	Wall-mounted in enclosed rooms or rack-mounted
Weight (incl. packaging)	approx. 2.5 kg (5.5 lbs)
Dimensions (W x H x D)	185 x 265 x 145 mm (7.3 x 10.4 x 5.7 ")
Testing and marking	Conforms to CE; Inspected for EMC Testing and marking in accordance with EN 61326; Tested for electrical safety in accordance with EN 61010 UL/CSA approved
Extras	Real-time clock, battery operated Flash-Memory (max. 512 kB, 20 kB RAM)
SD card, optional	30 days trend for two measurands

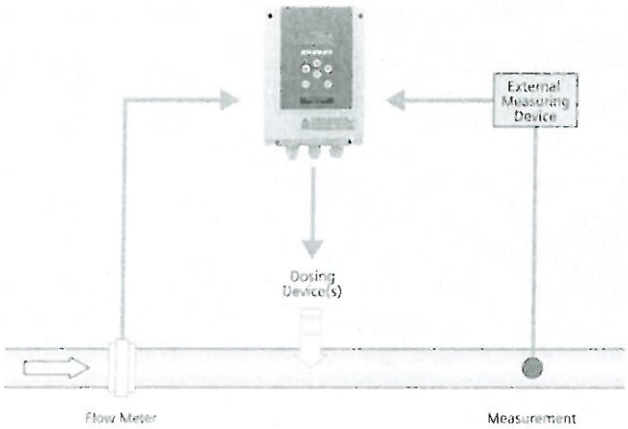

COMPOUND LOOP CONTROL WITH MIT SFC FC

Compound loop control is a combination of a flow proportional control with additional single feedback closed loop control to correct control deviations.

evoqua
WATER TECHNOLOGIES

One60 London Road, Sevenoaks, Kent, TN13 1BT, United Kingdom
Tel: +44 (0) 1732 721777 Email: info.uk@evoqua.com www.evoqua.com

4.11 Supernatant Chlorinators

evoqua
WATER TECHNOLOGIES

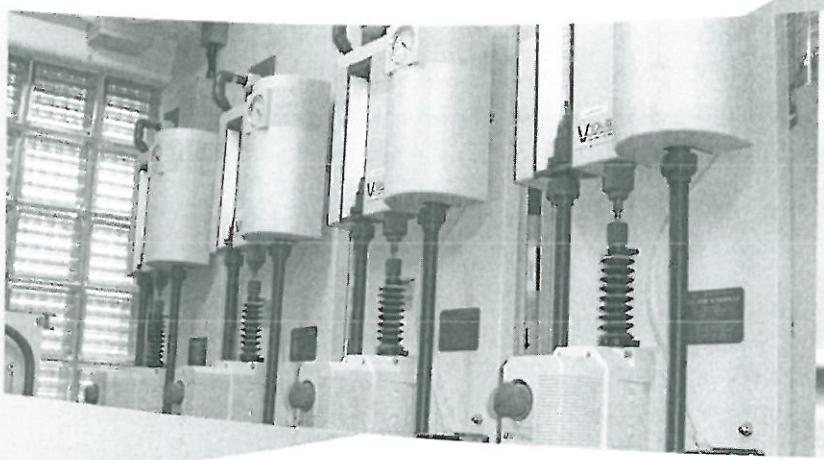

Wallace & Tiernan® Gas Feed Systems

V10K Vacuum gas feeder

The V10k gas feed system with automatic or manual control is the proven gas feed technology for capacities up to 15 kg/h combining a standardised flexible design with user-selectable configurations. V10k gas feeders operate according to the indirect procedure, i.e. operating under a vacuum that is produced at the injector where the metered gas (e.g. chlorine gas) is dissolved in the operating water and the resultant solution is discharged to the point of application. Gas flow control is achieved by the proven Wallace & Tiernan® V-notch orifice ensuring industry proven accuracy and repeatability.

FEATURES

- Rotameters with high resolution and easy readability in 15 capacities up to 15 kg/h
- Operating range for automatic control mode 1 : 20
- Differential regulating valve for precise feed rate control at low vacuum levels and economical injector operation
- Vacuum gauge for visual operation monitoring

GENERAL

V10k gas feed systems operate under a vacuum that is produced at the injector and transmitted through the control unit to the pressure/vacuum regulating valve on the gas supply source. This diaphragm-operated valve is opened by the vacuum and allows the gas to flow to the control unit where it passes through the rotameter and the V-notch orifice. On the rotameter the gas flow rate is measured and indicated. Downstream from the V-notch orifice the gas passes the differential regulating valve which maintains a consistent feed rate regardless of changes in the operating vacuum. At the injector, the metered gas is dissolved in the operating water stream and discharged as solution to the point of application.

The remote vacuum principle (vacuum from the gas supply containers up to the injector) is the basic technology of this design. There are no gas lines under pressure. If any part after the supply container gets broken, no gas can leak out,

Key Benefits

- Positive indication of operating status
- Positive shut-off
- Optional built-in automatic switchover
- Captive universal yoke mounting as standard

For automatic control, the V-notch plug is moved depending on the application requirements:

- Manual override is achieved by simply pulling the knob to disengage the drive motor
- 3 sets of volt-free contacts for system control manual override, MAX position, MIN position
- Feedback potentiometer for precise operation with the SFC SC or SFC PC controllers 4 - 20 mA actuator control (optional)
- Simple ratio control
- Feed rate adjustment by means of a dosing factor
- Connection to SPS control systems

TECHNICAL DATA

Gases and scale capacities:

Chlorine: up to 15.0 kg/h
Carbon dioxide: up to 8.0 kg/h
Sulphur dioxide: up to 10.0 kg/h
Ammonia: up to 5.0 kg/h
Feed ranges:
e.g. chlorine gas

1 - 22.5 g/h	0.15 - 3.0 kg/h
3 - 60 g/h	0.20 - 4.0 kg/h
10 - 200 g/h	0.25 - 5.0 kg/h
20 - 400 g/h	0.30 - 6.0 kg/h
30 - 600 g/h	0.40 - 8.0 kg/h
50 - 1000 g/h	0.50 - 10.0 kg/h
75 - 1500 g/h	10.00 - 15.0 kg/h
100 - 2000 g/h	

Operating range (V10k automatic control):
1 : 20 for any rotameter

Accuracy:
± 4 % of F. S.

Operating temperature:
+10 °C to +50 °C

Operating vacuum:
-40 to -200

Operating water pressure at injector:

3/4 " Injector	1 " Injector
16 bar maximum at 20 °C	21 bar maximum at 20 °C
13 bar maximum at 30 °C	13 bar maximum at 30 °C
10 bar maximum at 40 °C	12 bar maximum at 40 °C
5.9 bar maximum at 50 °C	8 bar maximum at 50 °C

4 - 20 mA actuator control (optional)

Measurement inputs:
1 x 4 - 20 mA
1 x servo motor position feedback
1 x external dosing factor

Relay outputs:
2 x non-isolated

Power supply:
115/230 V AC, 50 - 60 Hz

Power supply (V10k automatic control):
0.25 A at 230 V AC
0.50 A at 115 V AC

Electric positioner (V10k automatic control):

Operating voltages	230 V	115 V
	50/60 Hz	
Rating	19 mA	46 mA
Time approx.	80 sec.	65 sec.
Potentiometer	1 kOhm ± 10 %	
Max. switching capacity	1250 VA	150 W
Enclosure	IP 67	

Available configurations:

- with 5 " rotameter (standard) or 10 " rotameter
- 4 kg/h, 10 kg/h vacuum regulator or higher capacities standard or with switch-over option
- injector size 3/4 ", 1 " or 2 " standard or anti-siphon type

Option:
Vacuum contact pressure gauge for installation in the gas supply line for monitoring operating vacuum

evoqua
WATER TECHNOLOGIES

One60 London Road, Sevenoaks, Kent, TN13 1BT, United Kingdom
Tel: +44 (0) 1732 771 777 Email: info.uk@evoqua.com www.evoqua.com

4.12 Gas Detection System

evoqua
WATER TECHNOLOGIES

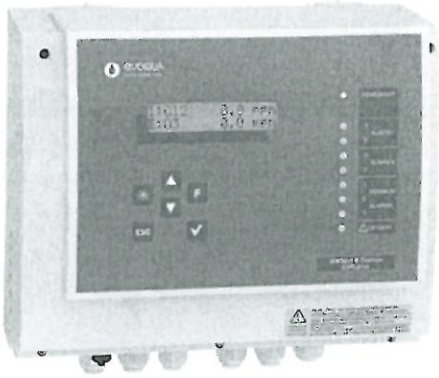

WALLACE & TIERNAN®
ANALYSERS AND CONTROLLERS

GMS *plus* Multi Function Gas Detection System

The GMS plus system is a flexible two channel measuring system designed for gas and temperature monitoring in up to two rooms. It can either use a single Chloratect sensor or a pair of Chloratect sensors to measure chlorine gas, chlorine dioxide or ozone, or it can also use other sensors to measure different gases. Pt 1000 sensors are used to measure the ambient temperature. Inside the Chloratect gas sensor there is an electrode that is permanently kept moist by electrolyte. This is achieved using a wick to draw electrolyte from a transparent reservoir by capillary action. The factory filling of electrolyte is enough to last for about six months of operation when measuring Cl2/ClO2 or three months when measuring ozone (O3). It is very simple for the operator to refill the electrolyte reservoir. In the event of a gas leak the electrode will depolarise as a result of an electrochemical reaction. The depolarisation current generated is proportional to the gas concentration in the air. The gas concentrations and temperatures are displayed on the display panel. The peak and average values over the past 8 hours can also be displayed. The desired alarm levels can be set using the menu via a control pad. Two values per channel can be specified. An alarm contact is activated for each limit value and the system will also set off an audible and a visual alarm. Two general alarm contacts can also be set off by these alarms. These alarm contacts, up to 4 of which are possible, can be used to control safety equipment such as a chlorine srubber, a shut off valve or a water spraying system. The integrated sensor monitor sets off a sensor alarm if there is a fault with any of the sensors.

INSTALLATION

If you need to measure chlorine, chlorine dioxide or ozone concentrations, the gas sensors need to be installed so that the sensors are about 35 cm above the floor of the room being monitored, since these gases are heavier than air, and therefore sink to ground level. The temperature sensor should be installed near the gas tank or cylinder. The safety regulations on water chlorination specify that the ambient temperature in chlorination rooms should not fall below +15 °C (59 °F) and should not exceed +50 °C (122 °F). A minimum temperature of +15 °C (59 °F) is needed to ensure the evaporation of liquid chlorine in the chlorine cylinder.

The electronic module, alarm klaxon and any other warning devices or alarms connected to the alarm output contacts can be installed anywhere outside the chlorination room. The electronic module may be up to 100 metres from the sensor.

KEY BENEFITS

- A variety of gas sensors can be used
- User-adjustable alarm contacts
- Clear, easy to read display of average and peak values over the past 8 hours
- Automatic fault detection and sensor monitoring
- External alarm acknowledgment
- Power backup using rechargeable batteries optional
- Printer port or RS 485 serial port for connection to ChemWeb-Server, OPC-Server Data Access V 2.0 or CMS software

GMS PLUS ELECTRONIC MODULE

Dual channel measuring system for two gas sensors (may be identical or different).
Chloratect sensor or passive 4 - 20 mA sensor
Pt 1000 thermocouple for measurement of the ambient temperature

Chloratect sensor:
for measurement of chlorine, chlorine dioxide or ozone
Measuring ranges:

Chlorine:	0 - 5 ppm or 0 - 20 ppm
Chlorine dioxide:	0 - 5 ppm or 0 - 20 ppm
Ozone:	0 - 1 ppm

Ambient temperature: 5 - 50 °C (41 - 122 °F)
Relative humidity: 15 % - 90 % non-condensing
Response time: T90 ≤ 90 s
Sensitivity: 0.1 ppm for gases
Protection type: IP 20
Ambient temperature sensor: Pt 1000
Measuring range: 0 - 50 °C (32 - 122 °F)
Sensitivity: 0.1 °C
Protection type: IP 65
Display:
Backlit LCD display
Resolution 2 x 16 characters
Units selectable: ppm / ml/m3 / 4 characters (user-definable)
Displays the current readings as well as peak and average values over the past 8 hours
Text menu available in 5 languages
Digital Inputs:
3 isolated contact inputs (door contacts I and II, external alarm acknowledgment)
Two additional digital inputs for running 24 V equipment with rechargeable backup batteries
Power failure detection, battery error, battery power low
Relay outputs:
Two alarm contacts per measuring channel

- Gas alarm contacts (two MAX contacts)
- Temperature alarm contacts (one MIN and one MAX contact)

Three general alarms, user-definable (for example, advance alarm, main alarm)
One sensor alarm (dry electrode, cable break, etc.)
All of the alarms can be N.O. or N.C. and logged or not logged.
An internal signal transmitter (buzzer) can also be activated.
Logged alarms can be acknowledged on the unit itself or externally.
Alarm contact threshold:
Continuously adjustable within the selected measuring range
Alarm delay: Continuously adjustable from 0 - 120 min.
Electrical data from the relay contacts:
max. 1250 VA to 250 V DC; max. 150 W to 30 V DC
Power failure output: Possible using a general alarm
Analogue outputs (4 - 20 mA):
Three outputs for values from channel 1 and 2, temperature on channel 1
Output load = 600 Ohm, non-isolated,
Accuracy ± 0.5% FS
Power supply:
200 - 240 V AC 50/60 Hz; 100 - 120 V AC 50/60 Hz
24 V DC in accordance with EN 61131 (18 - 30, 2V.)
Backup power supply for 24 V devices:
2 x 12 V lead-acid batteries 3Ah
Operating time in the event of power failure: min. 10 h
Operating temperature: 0 - 45 °C (32 - 113 °F)
Interfaces:
RS 232 or RS 422 printer port or
RS 485 for connection to ChemWeb-Server,
OPC-Server Data Access V 2.0 or CMS 3.0
Protection type: IP 66
Ambient temperature: 0 - 50 °C (32 - 122 °F)
Testing and labels:
Conforms to CE (89/336/EEC)
Inspected for EMC in accordance with EN 61326
Tested for electrical safety in accordance with EN 61010
Designed for use in an industrial environment as well as for domestic or office use.
Weight (incl. packaging): approx. 5.5 kg
Dimensions (W x H x D): 320 x 310 x 175 mm (12.6 x 12.2 x 6.9 ")

EVOQUA WATER TECHNOLOGIES

Oncor 60 London Road, Sevenoaks, Kent, TN13 1BT, United Kingdom
Tel: +44 (0) 1732 771 777 Email: info.uk@evoqua.com www.evoqua.com

4.13 Pre-Chlorination Booster Pump

GRUNDFOS

Submittal Data

PROJECT:		UNIT TAG:		QUANTITY:	
		TYPE OF SERVICE:			
REPRESENTATIVE:		SUBMITTED BY:		DATE:	
ENGINEER:		APPROVED BY:		DATE:	
CONTRACTOR:		ORDER NO.:		DATE:	

Note! Product picture may differ from actual product

CR 64-4

Vertical, multistage centrifugal pump with suction and discharge ports on the same level. The pump head and base are in cast iron. All other wetted parts are in stainless steel (EN 1.4301)

Conditions of Service	
Flow:	70 m³/h
Head:	86.45 m
Efficiency:	73.3 %
Liquid:	Water
Temperature:	20 °C
NPSH required:	2.93 m
Viscosity:	
Specific Gravity:	1.000

Pump Data	
Max pressure at stated temp:	16 bar / 120 °C
Liquid temperature range:	-30 .. 120 °C
Maximum ambient temperature:	60 °C
Approvals:	CE,TR
Shaft seal:	HQQE
Flange standard:	DIN
Pipe connection:	DN 100
Product number:	96123492

Motor Data	
Rated power - P2:	22 kW
Rated voltage:	220-240D/380-415Y V
Mains frequency:	50 Hz
Enclosure class:	55 Dust/Jetting
Insulation class:	F
Motor protection:	PTC
Motor type:	180MB
Motor_efficiency:	92.7-92.7 %

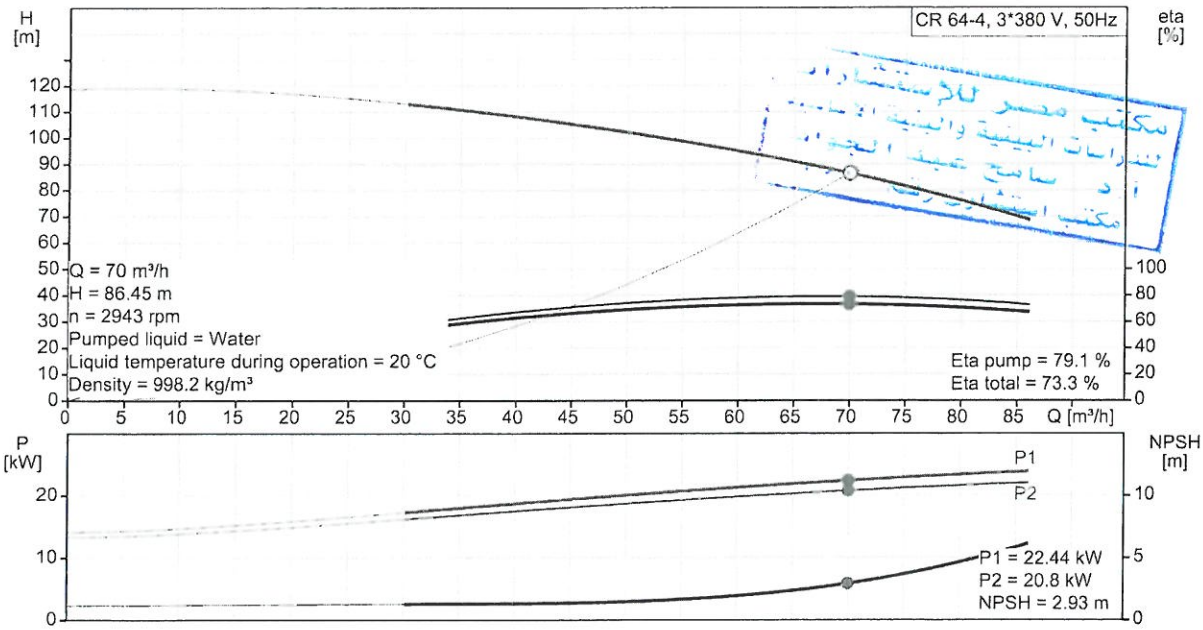

GRUNDFOS

Submittal Data

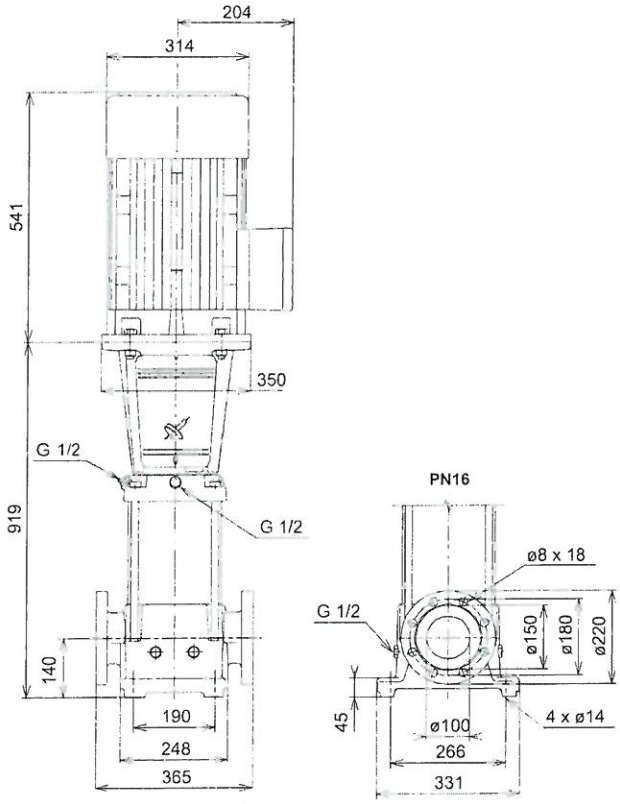

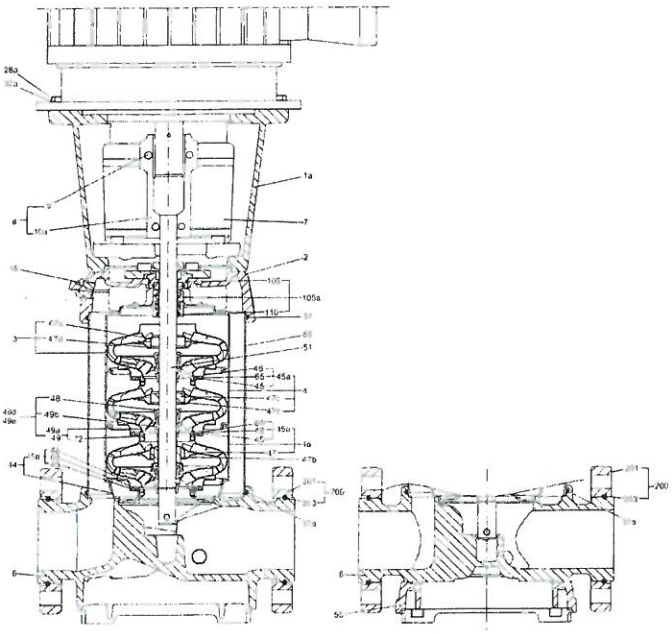

Materials:

Pump housing:	Cast iron EN-JS1050 ASTM 80-55-06
Impeller:	Stainless steel DIN W.-Nr. 1.4301 AISI 304
Material code:	A
Code for rubber:	E

GRUNDFOS

Company name:
Created by:
Phone:

Date: 13/11/2017

Tender Text

Product No.: 96123492
CR 64-4 A-F-A-E-HQQE

Liquid:

Pumped liquid:	Water
Liquid temperature range:	-30 .. 120 °C
Liquid temperature during operation:	20 °C
Density:	998.2 kg/m³

Technical:

Speed for pump data:	2947 rpm
Actual calculated flow:	70 m³/h
Resulting head of the pump:	86.45 m
Primary shaft seal:	HQQE
Approvals on nameplate:	CE,TR
Curve tolerance:	ISO9906:2012 3B

Materials:

Pump housing:	Cast iron EN-JS1050 ASTM 80-55-06
Impeller:	Stainless steel DIN W.-Nr. 1.4301 AISI 304
Bush material:	Graflon

Installation:

Maximum ambient temperature:	60 °C
Max pressure at stated temp:	16 bar / 120 °C 16 bar / -30 °C
Flange standard:	DIN
Pipe connection:	DN 100
Pressure rating:	PN 16
Flange size for motor:	FF300

Electrical data:

Motor type:	180MB
IE Efficiency class:	IE3
Rated power - P2:	22 kW
Power (P2) required by pump:	22 kW
Mains frequency:	50 Hz
Rated voltage:	3 x 220-240D/380-415Y V
Rated current:	68,5/39,5 A
Starting current:	830 %
Cos phi - power factor:	0,90-0,90
Rated speed:	2950 rpm
Efficiency:	IE3 92,7%

GRUNDFOS

Company name:
Created by:
Phone:

Date: 13/11/2017

Motor efficiency at full load:	92.7-92.7 %
Motor efficiency at 3/4 load:	93.7 %
Motor efficiency at 1/2 load:	94.4 %
Number of poles:	2
Enclosure class (IEC 34-5):	55 Dust/Jetting
Insulation class (IEC 85):	F

Others:

Label:	Grundfos Blueflux
Minimum efficiency index, MEI ≥:	0.7
Net weight:	211 kg
Gross weight:	244 kg
Shipping volume:	0.52 m³

GRUNDFOS

Company name:
Created by:
Phone:

Date: 13/11/2017

Position	Qty.	Description
	1	**CR 64-4 A-F-A-E-HQQE**

Product No.: 96123492

Vertical, multistage centrifugal pump with suction and discharge ports on same the level (in-line) enabling installation in a horizontal one-pipe system. The pump head and base are in cast iron – all other wetted parts are in stainless steel.

A cartridge shaft seal ensures high reliability, safe handling and easy service and access. Power transmission is via a rigid split coupling. Pipework connection is via DIN flanges.

The pump is fitted with a 3-phase, fan-cooled asynchronous motor.

Liquid:
Pumped liquid: Water

GRUNDFOS

Company name:
Created by:
Phone:

Date: 13/11/2017

Position	Qty.	Description

Liquid temperature range: -30 .. 120 °C
Liquid temperature during operation: 20 °C
Density: 998.2 kg/m³

Technical:

Speed for pump data:	2947 rpm
Actual calculated flow:	70 m³/h
Resulting head of the pump:	86.45 m
Primary shaft seal:	HQQE
Approvals on nameplate:	CE,TR
Curve tolerance:	ISO9906:2012 3B

Materials:

Pump housing:	Cast iron EN-JS1050 ASTM 80-55-06
Impeller:	Stainless steel DIN W.-Nr. 1.4301 AISI 304
Bush material:	Graflon

Installation:

Maximum ambient temperature:	60 °C
Max pressure at stated temp:	16 bar / 120 °C 16 bar / -30 °C
Flange standard:	DIN
Pipe connection:	DN 100
Pressure rating:	PN 16
Flange size for motor:	FF300

Electrical data:

Motor type:	180MB
IE Efficiency class:	IE3
Rated power - P2:	22 kW
Power (P2) required by pump:	22 kW
Mains frequency:	50 Hz
Rated voltage:	3 x 220-240D/380-415Y V
Rated current:	68,5/39,5 A
Starting current:	830 %
Cos phi - power factor:	0,90-0,90
Rated speed:	2950 rpm
Efficiency:	IE3 92,7%
Motor efficiency at full load:	92.7-92.7 %
Motor efficiency at 3/4 load:	93.7 %
Motor efficiency at 1/2 load:	94.4 %
Number of poles:	2
Enclosure class (IEC 34-5):	55 Dust/Jetting
Insulation class (IEC 85):	F

Others:

Label:	Grundfos Blueflux
Minimum efficiency index, MEI ≥:	0.7
Net weight:	211 kg
Gross weight:	244 kg
Shipping volume:	0.52 m³

GRUNDFOS

Company name:
Created by:
Phone:

Date: 13/11/2017

96123492 CR 64-4 50 Hz

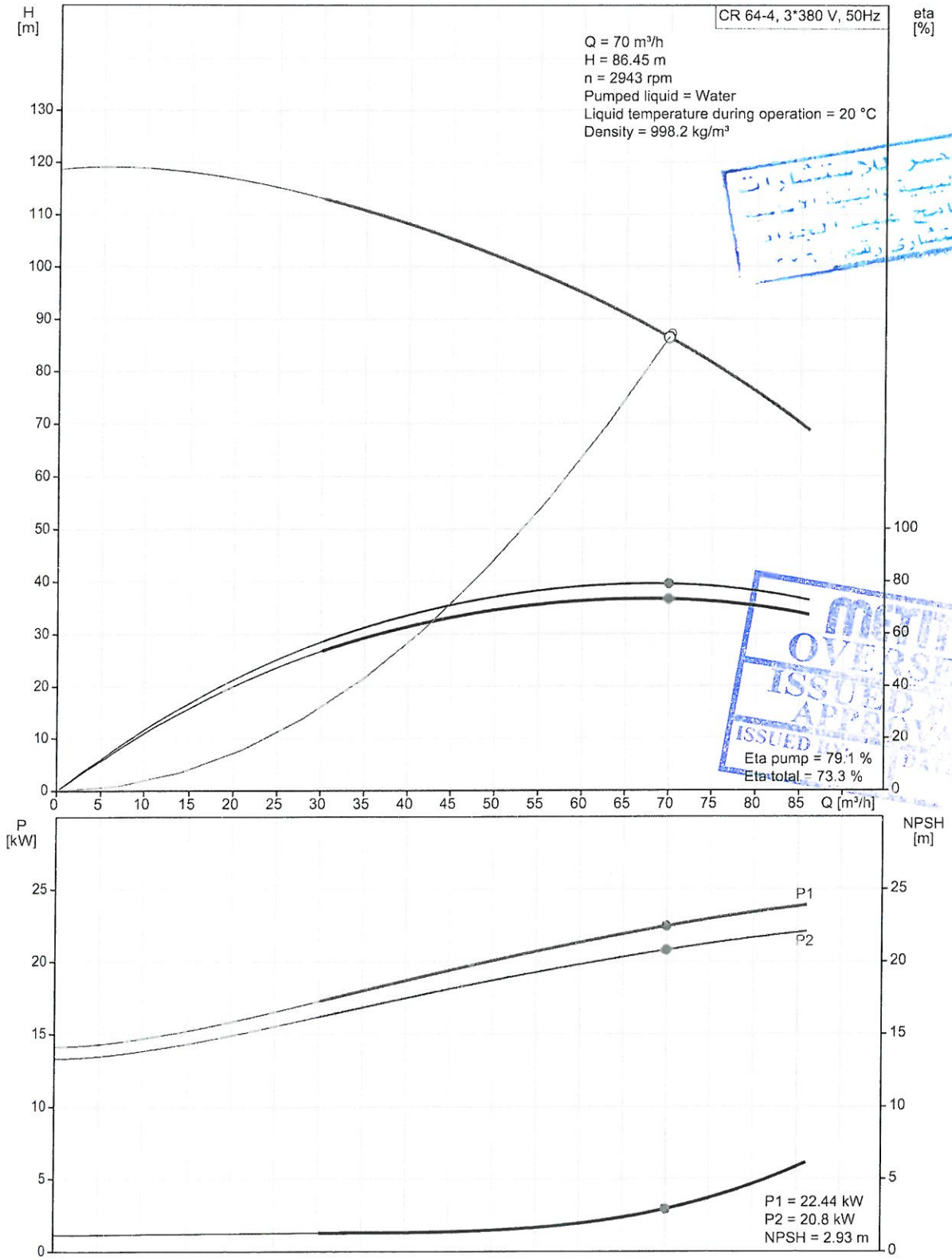

GRUNDFOS

Company name:
Created by:
Phone:

Date: 13/11/2017

Description	Value
General information:	
Product name:	CR 64-4 A-F-A-E-HQQE
Product No:	96123492
EAN number:	5700396697024
Technical:	
Speed for pump data:	2947 rpm
Actual calculated flow:	70 m³/h
Resulting head of the pump:	86.45 m
Head max:	119.1 m
Impellers:	4
Primary shaft seal:	HQQE
Approvals on nameplate:	CE,TR
Curve tolerance:	ISO9906:2012 3B
Pump type:	CR 64
Stages:	4
Pump version:	A
Model:	B
Materials:	
Pump housing:	Cast iron EN-JS1050 ASTM 80-55-06
Impeller:	Stainless steel DIN W.-Nr. 1.4301 AISI 304
Material code:	A
Code for rubber:	E
Bush material:	Graflon
Installation:	
Maximum ambient temperature:	60 °C
Max pressure at stated temp:	16 bar / 120 °C 16 bar / -30 °C
Flange standard:	DIN
Connect code:	F
Pipe connection:	DN 100
Pressure rating:	PN 16
Flange size for motor:	FF300
Liquid:	
Pumped liquid:	Water
Liquid temperature range:	-30 .. 120 °C
Liquid temperature during operation:	20 °C
Density:	998.2 kg/m³
Electrical data:	
Motor type:	180MB
IE Efficiency class:	IE3
Rated power - P2:	22 kW
Power (P2) required by pump:	22 kW
Mains frequency:	50 Hz
Rated voltage:	3 x 220-240D/380-415Y V
Rated current:	68,5/39,5 A
Starting current:	830 %
Cos phi - power factor:	0,90-0,90
Rated speed:	2950 rpm
Efficiency:	IE3 92,7%
Motor efficiency at full load:	92.7-92.7 %

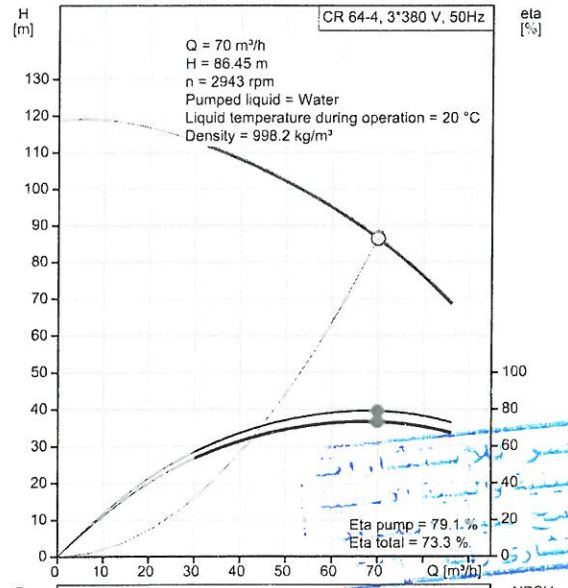

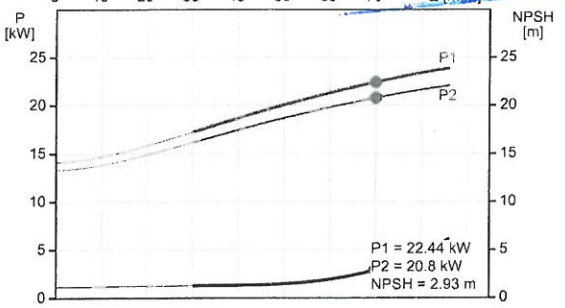

GRUNDFOS

Company name:
Created by:
Phone:

Date: 13/11/2017

Description	Value
Motor efficiency at 3/4 load:	93.7 %
Motor efficiency at 1/2 load:	94.4 %
Number of poles:	2
Enclosure class (IEC 34-5):	55 Dust/Jetting
Insulation class (IEC 85):	F
Motor protec:	PTC
Motor No:	85U07530
Others:	
Label:	Grundfos Blueflux
Minimum efficiency index, MEI ≥:	0.7
Net weight:	211 kg
Gross weight:	244 kg
Shipping volume:	0.52 m³

GRUNDFOS

Company name:
Created by:
Phone:

Date: 13/11/2017

96123492 CR 64-4 50 Hz

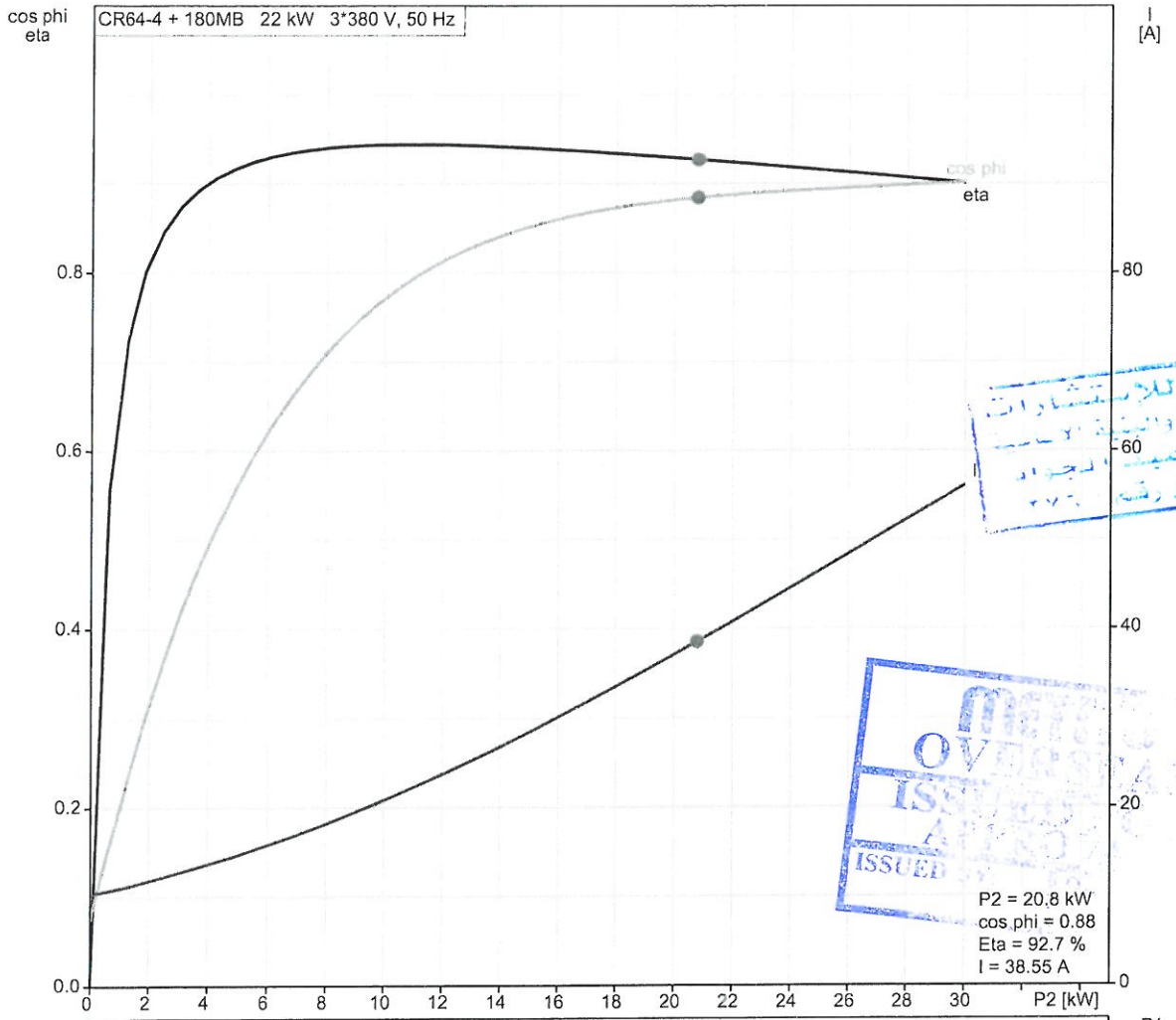

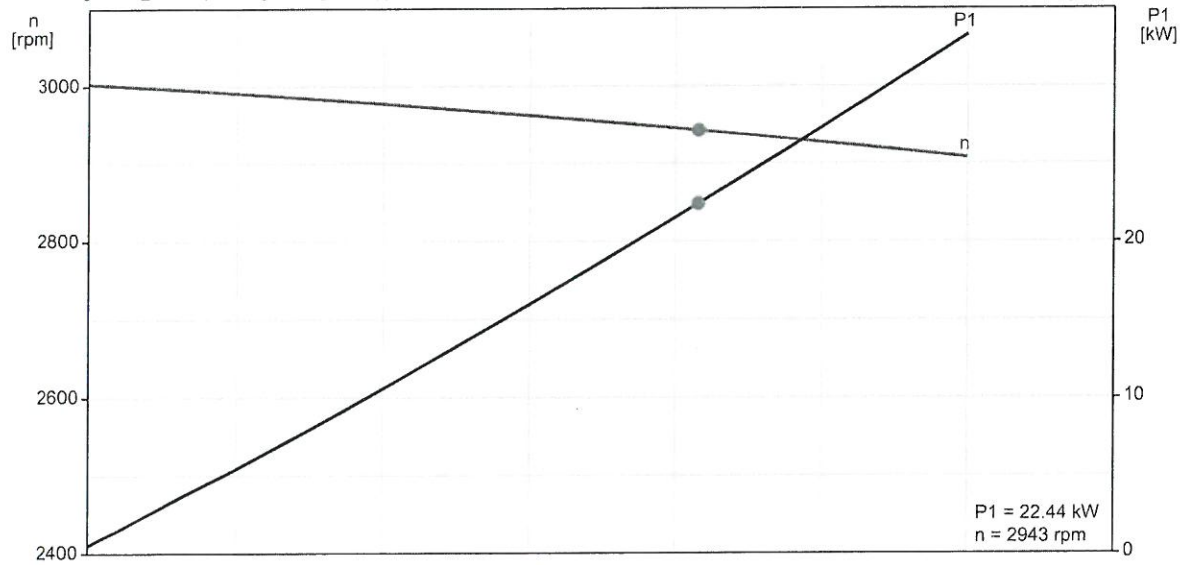

Company name:
Created by:
Phone:

Date: 13/11/2017

96123492 CR 64-4 50 Hz

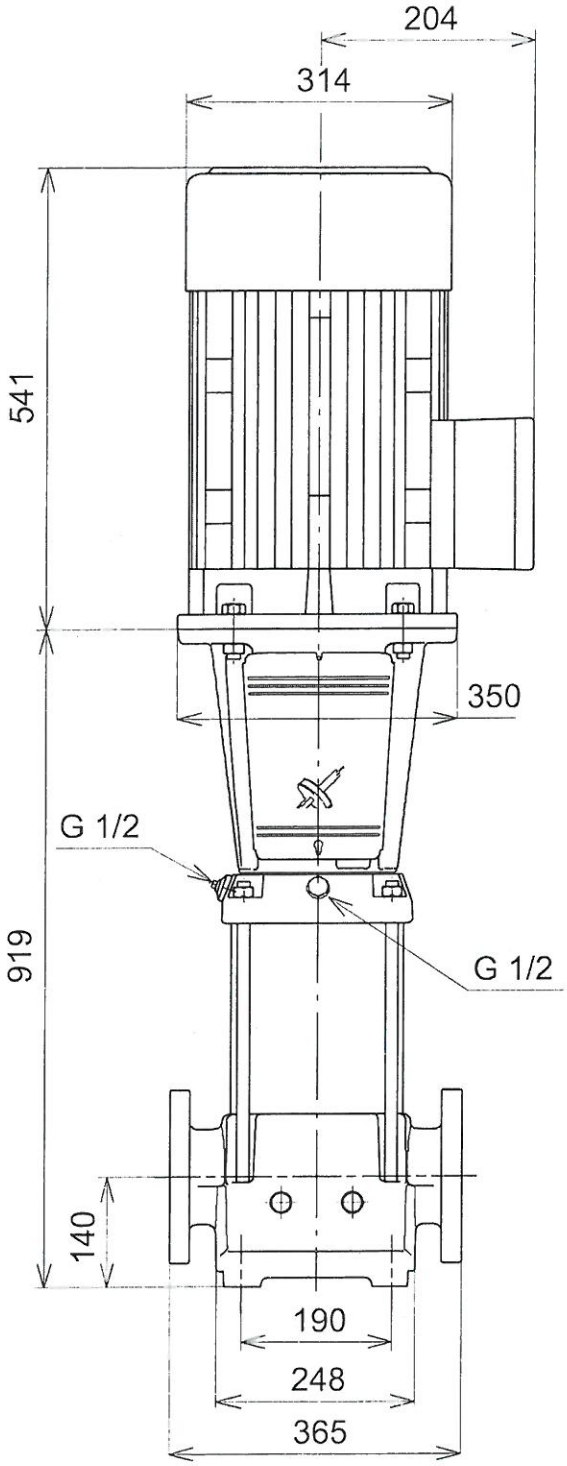

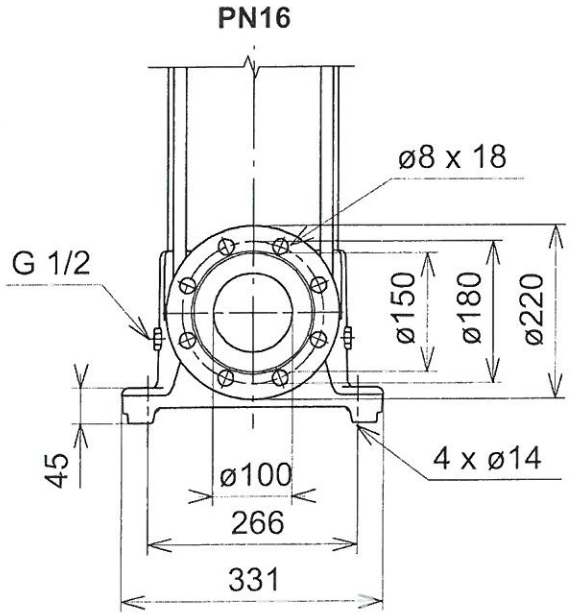

Note! All units are in [mm] unless others are stated.
Disclaimer: This simplified dimensional drawing does not show all details.

GRUNDFOS

Company name:
Created by:
Phone:

Date: 13/11/2017

Exploded view

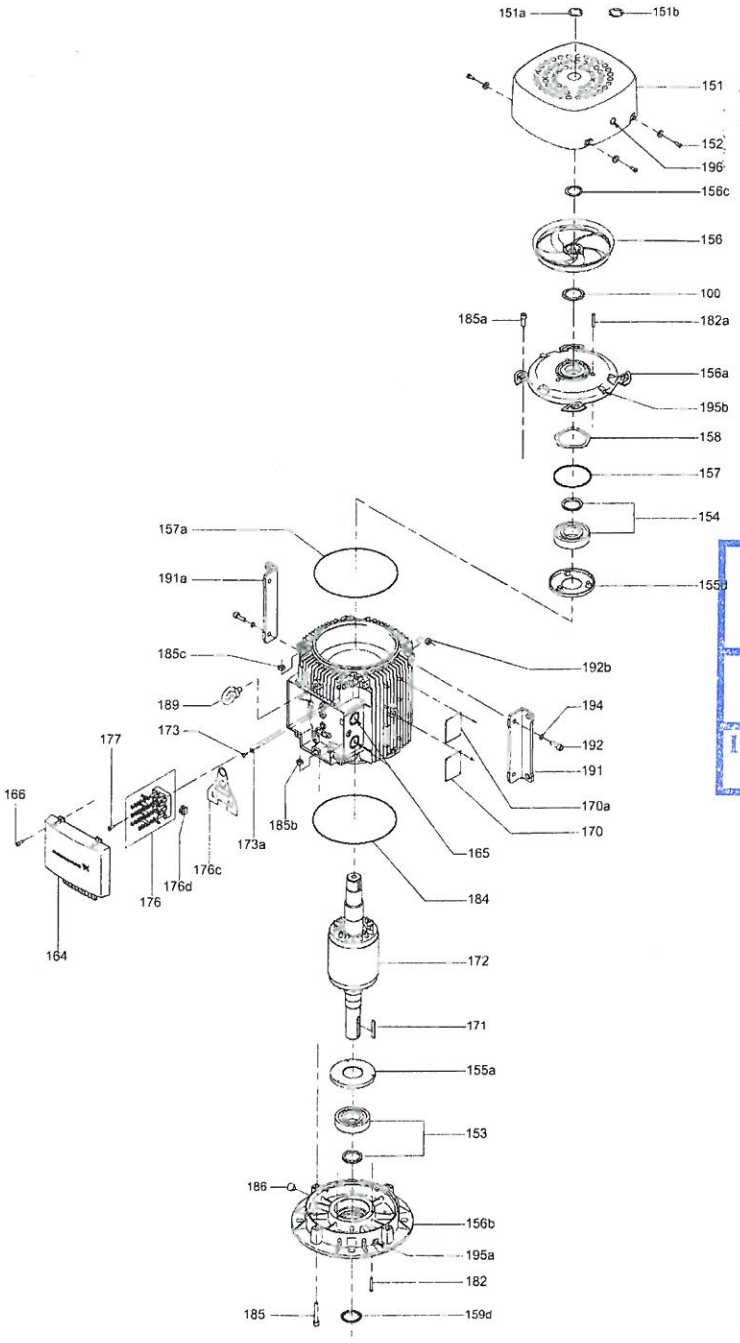

4.14 Post Chlorination Booster Pump

GRUNDFOS

Submittal Data

PROJECT:		UNIT TAG:		QUANTITY:	
		TYPE OF SERVICE:			
REPRESENTATIVE:		SUBMITTED BY:		DATE:	
ENGINEER:		APPROVED BY:		DATE:	
CONTRACTOR:		ORDER NO.:		DATE:	

مكتب مدير للاستشارات
للدراسات البيئية والبنية الأساسية
أ.د / سامح عبد الجواد
مكتب استشاري رقم : ٢٧٦

CR 45-4-2

Vertical, multistage centrifugal pump with suction and discharge ports on the same level. The pump head and base are in cast iron. All other wetted parts are in stainless steel (EN 1.4301)

METITO OVERSEAS
ISSUED FOR APPROVAL
ISSUED BY:

Note! Product picture may differ from actual product

Conditions of Service	
Flow:	45 m³/h
Head:	72.34 m
Efficiency:	70.1 %
Liquid:	Water
Temperature:	68 °F
NPSH required:	2.43 m
Viscosity:	
Specific Gravity:	1.000

Pump Data	
Max pressure at stated temp:	232 psi / 250 °F
Liquid temperature range:	-22 ... 248 °F
Maximum ambient temperature:	140 °F
Approvals:	CE,TR
Shaft seal:	HQQE
Flange standard:	DIN
Pipe connection:	DN 80
Product number:	96122752

Motor Data	
Rated power - P2:	20 HP
Rated voltage:	220-240D/380-415Y V
Mains frequency:	50 Hz
Enclosure class:	55 Dust/Jetting
Insulation class:	F
Motor protection:	PTC
Motor type:	160MD
Motor efficiency:	91.9-91.9 %

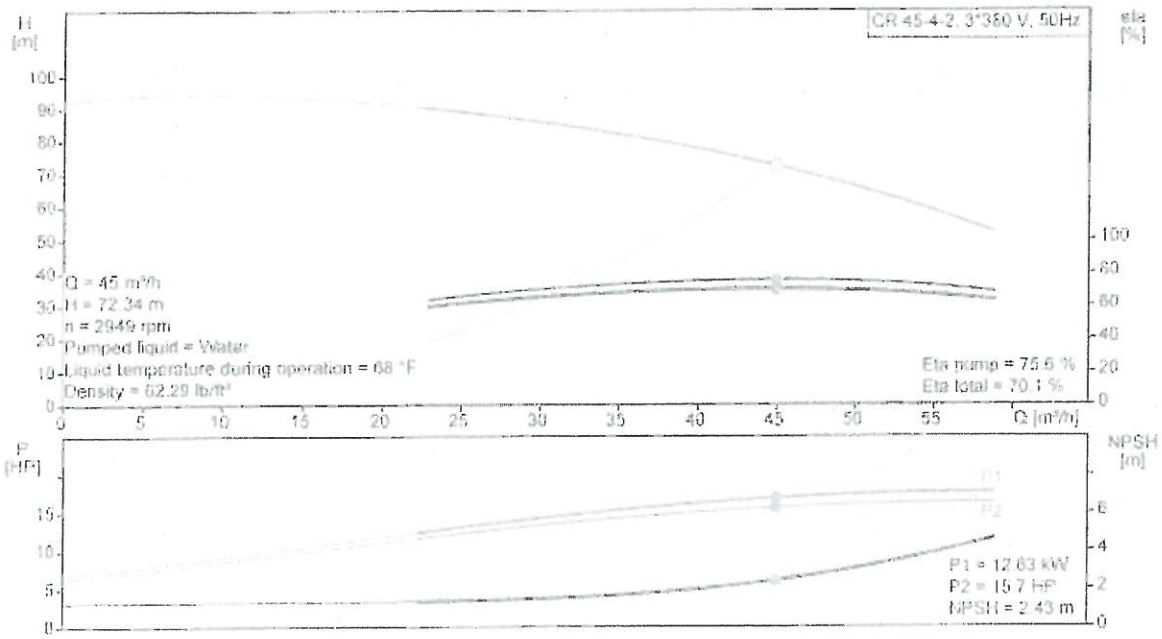

GRUNDFOS

Company name:
Created by:
Phone:

Date: 05/10/2017

96122752 CR 45-4-2 50 Hz

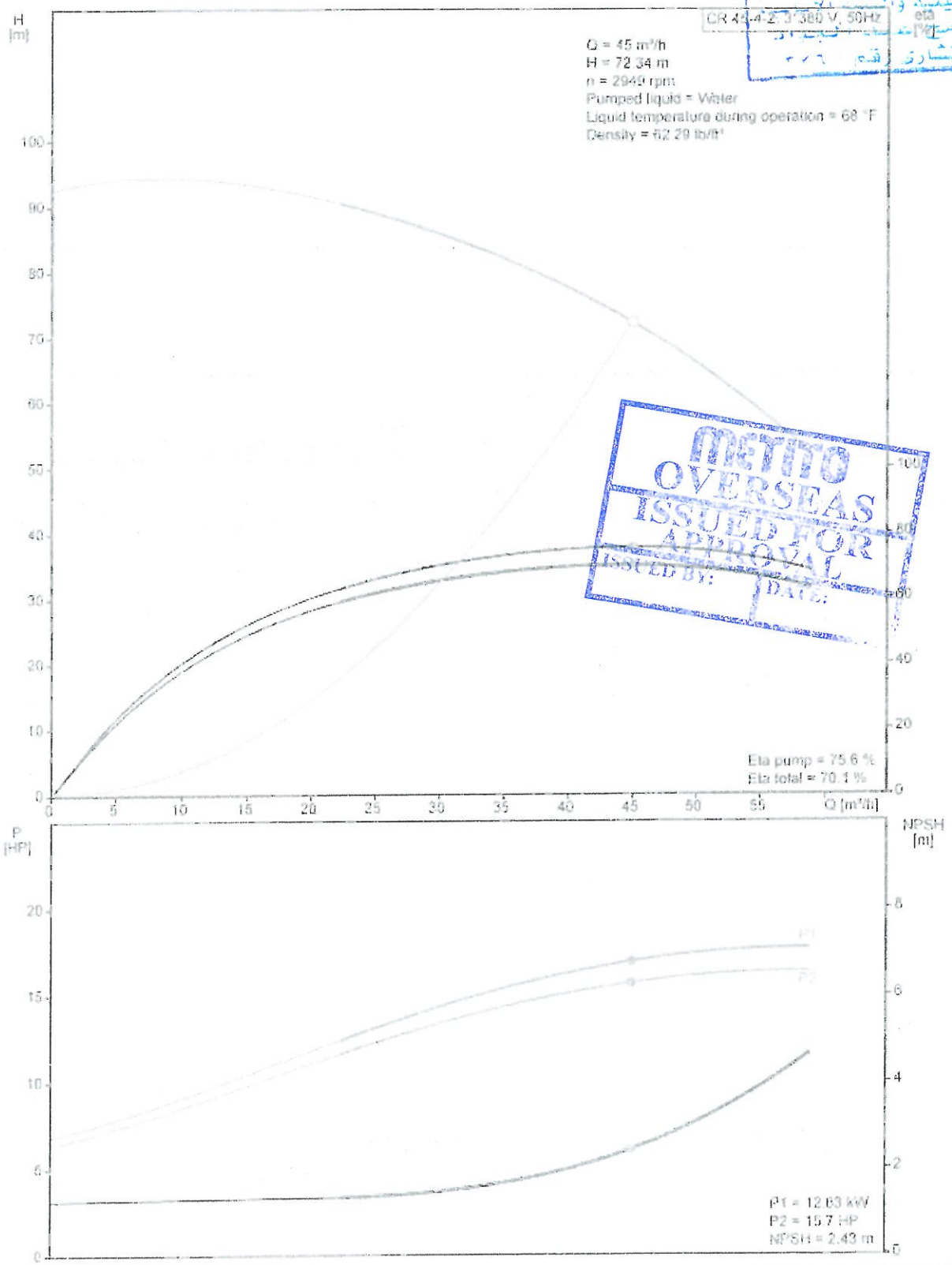

4.15 Small Capacity Booster Pumps

GRUNDFOS LENNTECH

Company name: Lenntech BV - lenntech.com
Created by: info@lenntech.com
Phone: +31 15 2610900
Fax: +31 15 2616289
Date: -

Description	Value
Product name:	CR 1-7 A-FGJ-A-E-HQQE
Product No:	96516244
EAN number:	5700396739335
Technical:	
Speed for pump data:	2873 rpm
Rated flow:	1.8 m³/h
Rated head:	33.6 m
Head max:	43.7 m
Impellers:	7
Shaft seal:	HQQE
Approvals on nameplate:	CE,TR
Curve tolerance:	ISO 9906:1999 Annex A
Pump type:	CR 1
Stages:	7
Pump version:	A
Model:	A
Materials:	
Pump housing:	Cast iron EN-JL1030 ASTM A48-30 B
Impeller:	Stainless steel DIN W.-Nr. 1.4301 AISI 304
Material code:	A
Code for rubber:	E
Installation:	
Maximum ambient temperature:	313 K
Max pressure at stated temp:	25 bar / 120 °C 25 bar / -20 °C
Flange standard:	DIN
Connect code:	FGJ
Pipe connection:	DN 25 / DN 32
Pressure stage:	PN 16 / PN 25
Flange size for motor:	FT85
Liquid:	
Pumped liquid:	Water
Liquid temperature range:	253 ... 393 K
Liquid temp:	293 K
Density:	998.2 kg/m³
Electrical data:	
Motor type:	71A
IE Efficiency class:	NA
Number of poles:	2
Rated power - P2:	0.37 kW
Power (P2) required by pump:	0.37 kW 0.37 kW
Mains frequency:	50 Hz
Rated voltage:	3 x 220-240 D/380-415 Y V
Rated current:	1.74/1.00 A
Starting current:	490-530 %
Cos phi - power factor:	0.80-0.70
Rated speed:	2850-2880 rpm
Efficiency:	78.5%
Motor efficiency at full load:	78.5 %
Motor efficiency at 3/4 load:	79.0-76.5 %
Motor efficiency at 1/2 load:	75.5-71.5 %
Enclosure class (IEC 34-5):	55 (Protect. water jets/dust)
Insulation class (IEC 85):	F
Motor protec:	NONE

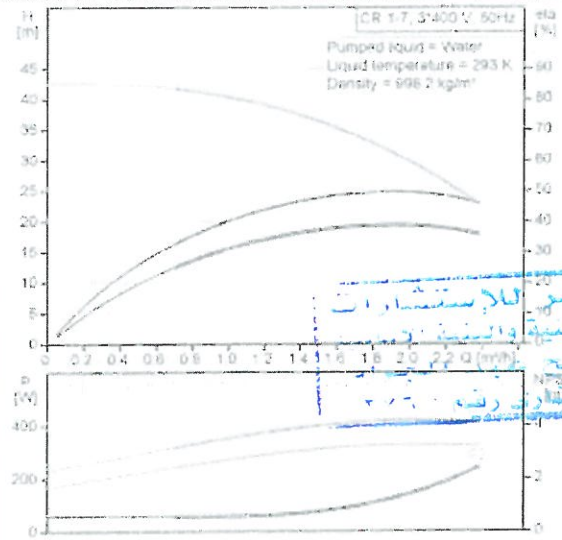

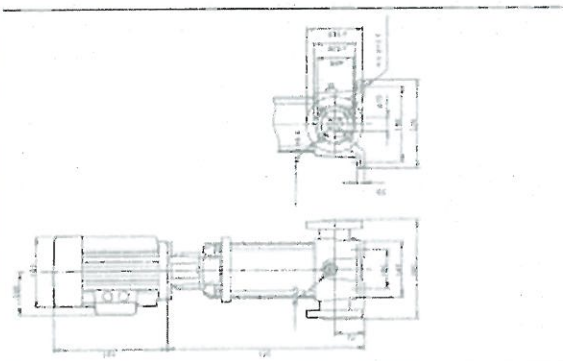

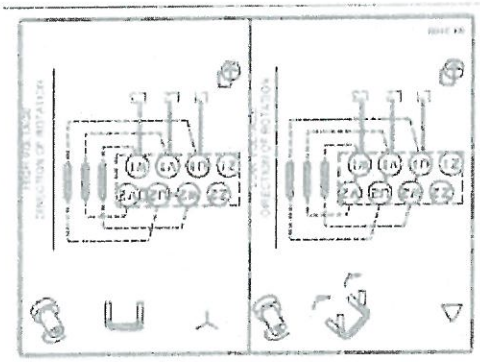

GRUNDFOS LENNTECH

Company name: Lenntech BV - lenntech.com
Created by: info@lenntech.com
Phone: +31 15 2610900
Fax: +31 15 2616289
Date: -

96516244 CR 1-7 50 Hz

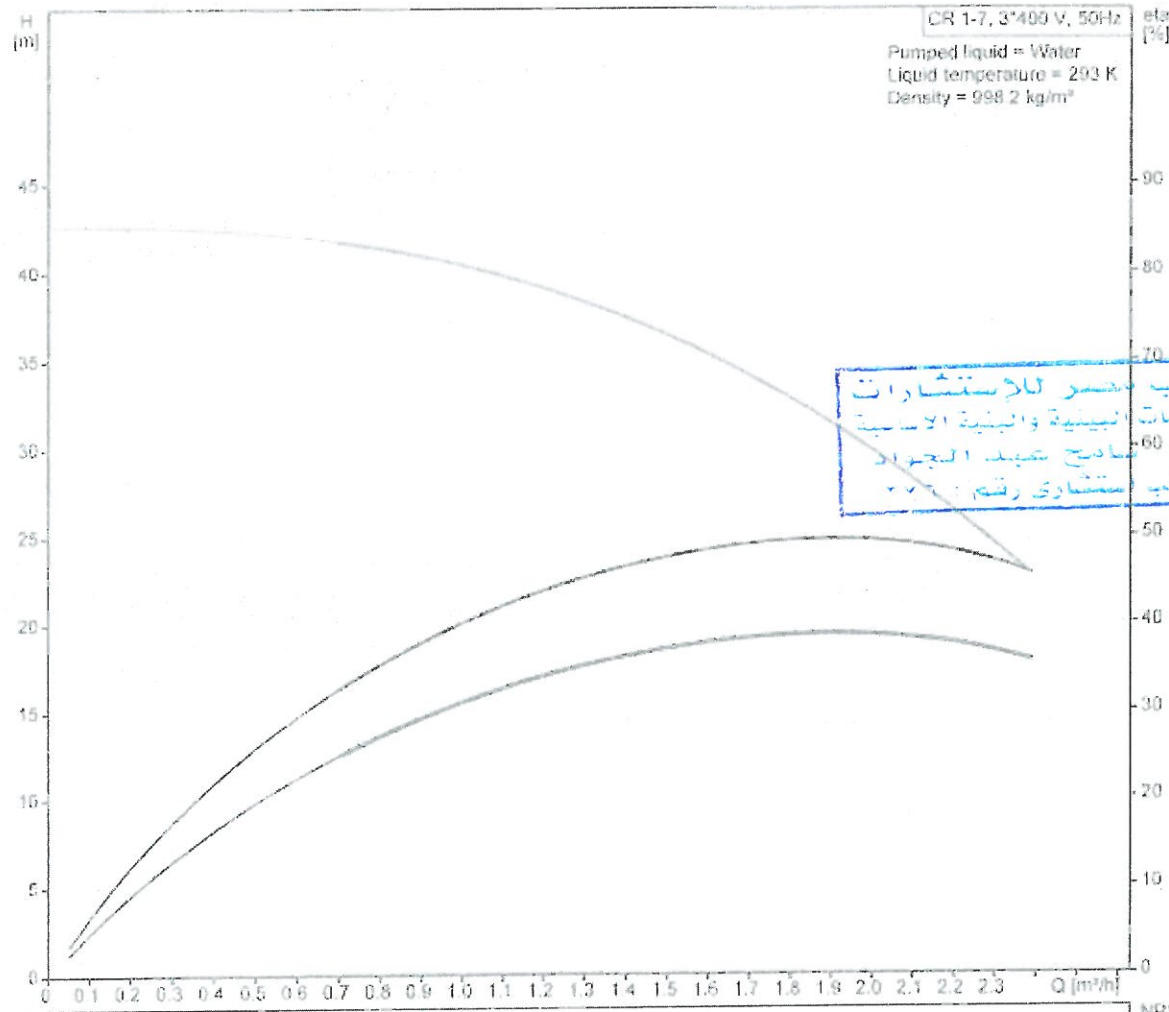

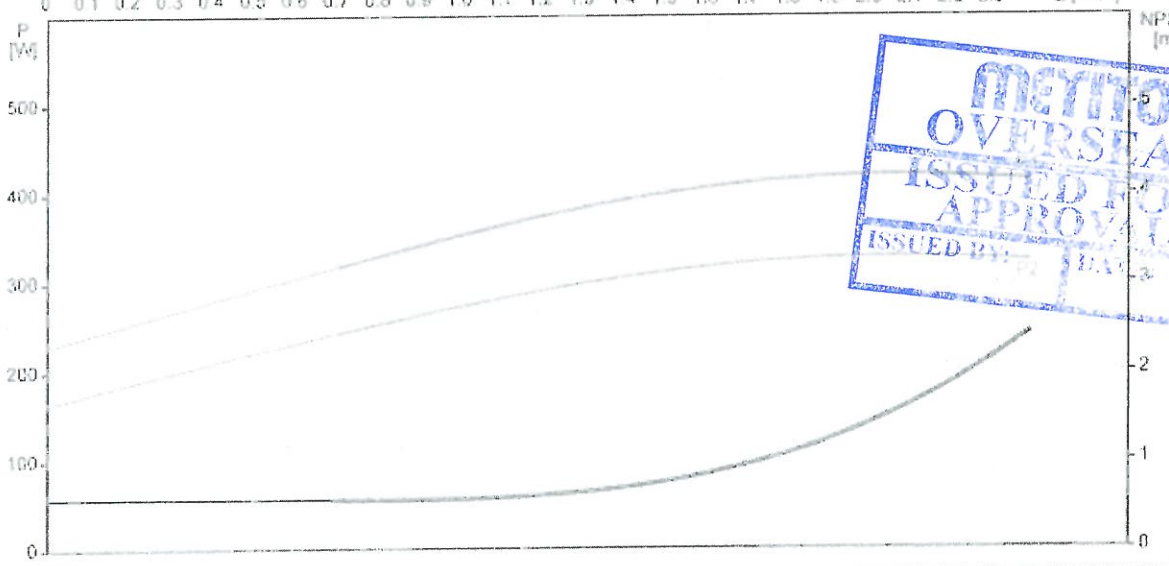

4.16) Injection Curves

4.16.1 Injection Curve for Supernatant Injector

Chlor Chlorine g/h	Gegendruck Backpressure bar	Injektor- Eingangs- und Abgangsstück Injector Throat and Tailpiece 99	*	140	*	193	*	242	*
200	↑	2,5	D	1,7	F				
400		3,3	D	2,1	F				
600		4,1	D	2,3	F				
1000		4,8	D	2,6	F	2,4	J		
1500	0,7	6,0	D	3,8	F	2,6	J	2,2	J
2000				4,0	G	3,0	J	2,6	J
3000				4,9	G	4,6	J	3,4	J
4000				6,4	G	6,0	J	4,7	J
5000	↓			8,2	G			8,2	J

Chlor Chlorine g/h	Gegendruck Backpressure bar	Injektor- Eingangs- und Abgangsstück Injector Throat and Tailpiece 99	*	140	*	193	*	242	*
200	↑	3,3	D	2,7	F				
400		4,0	D	3,2	F				
600		5,1	D	3,4	F				
1000		6,6	D	3,6	F	3,0	G		
1500	1,4	8,3	D	4,5	F	3,9	G	2,7	J
2000		10,5	D	5,4	G	4,3	G	3,3	J
3000				5,8	G	5,2	H	4,3	J
4000				7,1	G	6,1	J	5,4	J
5000	↓			9,3	G			9,3	J

Chlor Chlorine g/h	Gegendruck Backpressure bar	Injektor- Eingangs- und Abgangsstück Injector Throat and Tailpiece 99	*	140	*	193	*	242	*
200	↑	5,6	D	5,3	F				
400		6,8	D	5,4	F				
600		7,4	D	5,7	F				
1000		8,5	D	6,1	F	4,5	G		
1500	2,8	11,0	D	6,6	F	6,4	G		
2000		12,4	D	7,6	F	6,8	G		
3000				8,4	F	7,0	H	6,3	H
4000				10,5	G	8,6	H	8,7	J
5000	↓			11,9	G			12,5	J

The 3/4" injector with nozzles and tailway "140 F" requires:
3.6 bar g inlet pressure against 1.4 bar g
and
6.1 bar g inlet pressure against 2.8 bar g.

Inlet pressure against 1.5 bar g is determined by interpolation:

Result: 3.8 bar g

For safety reason this value is rounded to 4 bar g.

In the curves on the right side the required water quantity is determined:
4 bar g with nozzle nr. 140
Result: 1000 l/h

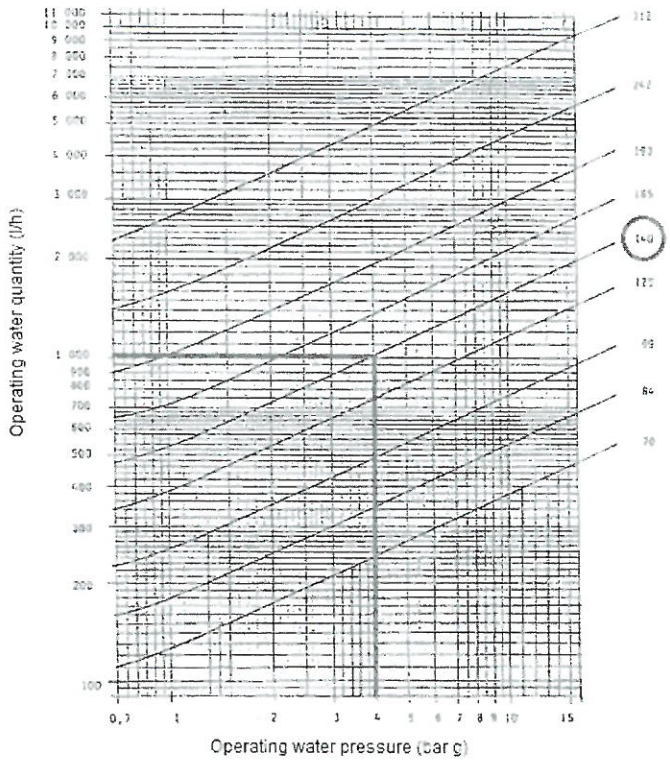

MATERIAL		LAE5479-001	11-MAY-12
TITLE: Projektierungs-Richtlinie ¾" Injektor	ISSUE	CHANGE No.	DATE
	SCALE	DRN: HF	CHK
	RELEASED	ENG: AK	PROD DATE
EVOQUA Water Technologies	NUMBER: MAE1038		
FIRST ANGLE PROJECTION	DIMENSIONS IN mm	DESIGN CENTRE: GER	SHEET 7 OF 7
REF: MAE1038	ISS: 5	TOLERANCES TO ISO 2768 - m	A4 ID 2006

MATERIAL		LAE5479-001	11-MAY-12
TITLE: Projektierungs-Richtlinie ¾" Injektor	ISSUE	CHANGE No.	DATE
	SCALE	DRN: HF	CHK
	RELEASED	ENG: AK	PROD DATE
EVOQUA Water Technologies	NUMBER: MAE1038		
FIRST ANGLE PROJECTION	DIMENSIONS IN mm	DESIGN CENTRE: GER	SHEET 7 OF 7
REF: MAE1038	ISS: 5	TOLERANCES TO ISO 2768 - m	A4 ID 2006

4.16 .2 Injection Curve for pre Injector

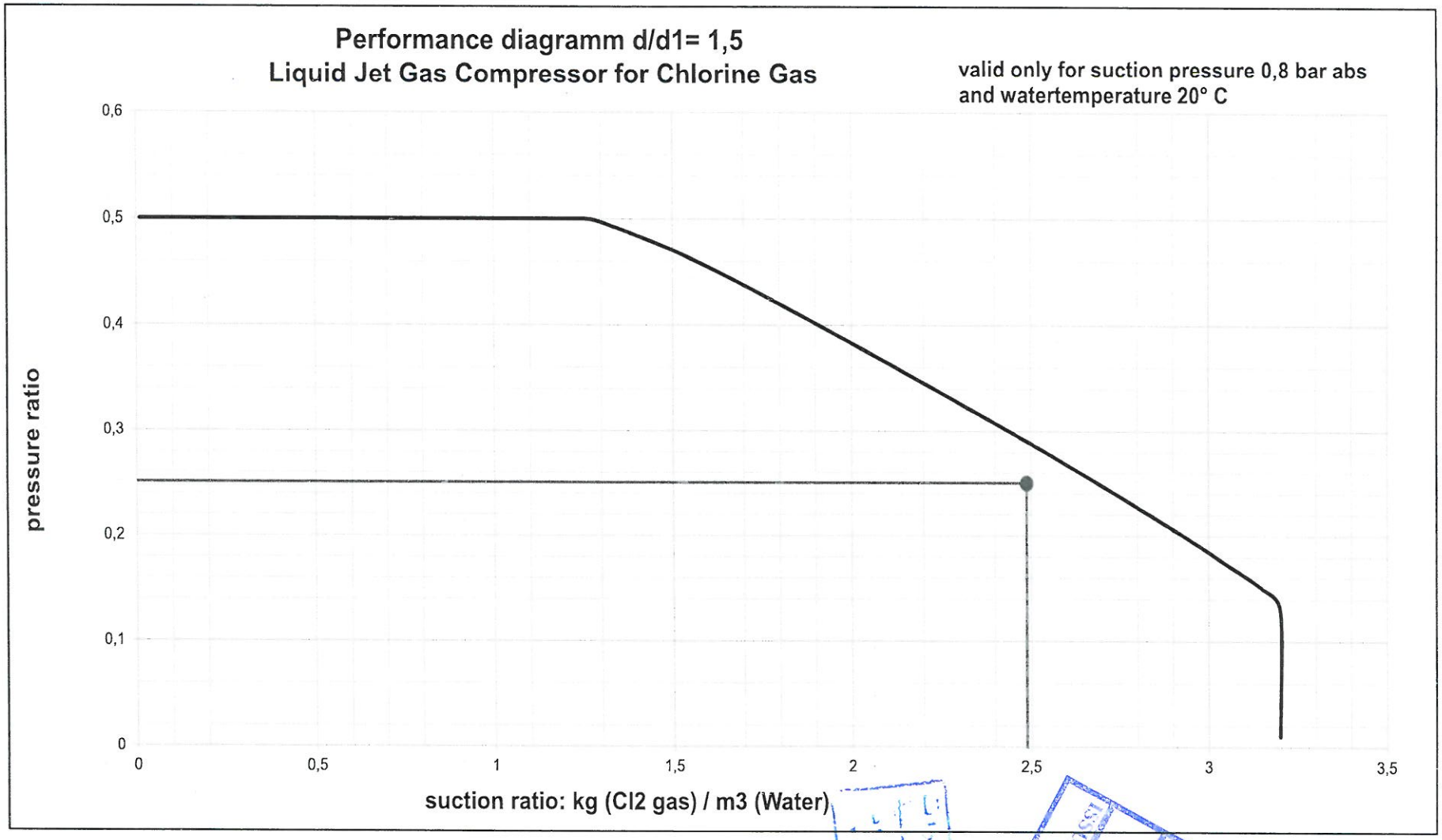

$$\text{pressure ratio} = \frac{\text{discharge pressure - suction pressure}}{\text{motive pressure - suction pressure}} = \frac{3 \text{ bar abs - 0.8 bar abs}}{9.5 \text{ bar abs - 0.8 bar abs}} = 0.25$$

$$\text{suction ratio} = \frac{\text{suction flow}}{\text{motive flow}} = \frac{174 \text{ kg/h Cl2 gas}}{70 \text{ m3/h water}} = 2.49$$

4.16 .3 Injection Curve for Post Injector

Performance diagramm d/d1= 1,5
Liquid Jet Gas Compressor for Chlorine Gas

valid only for suction pressure 0,8 bar abs
and watertemperature 20° C

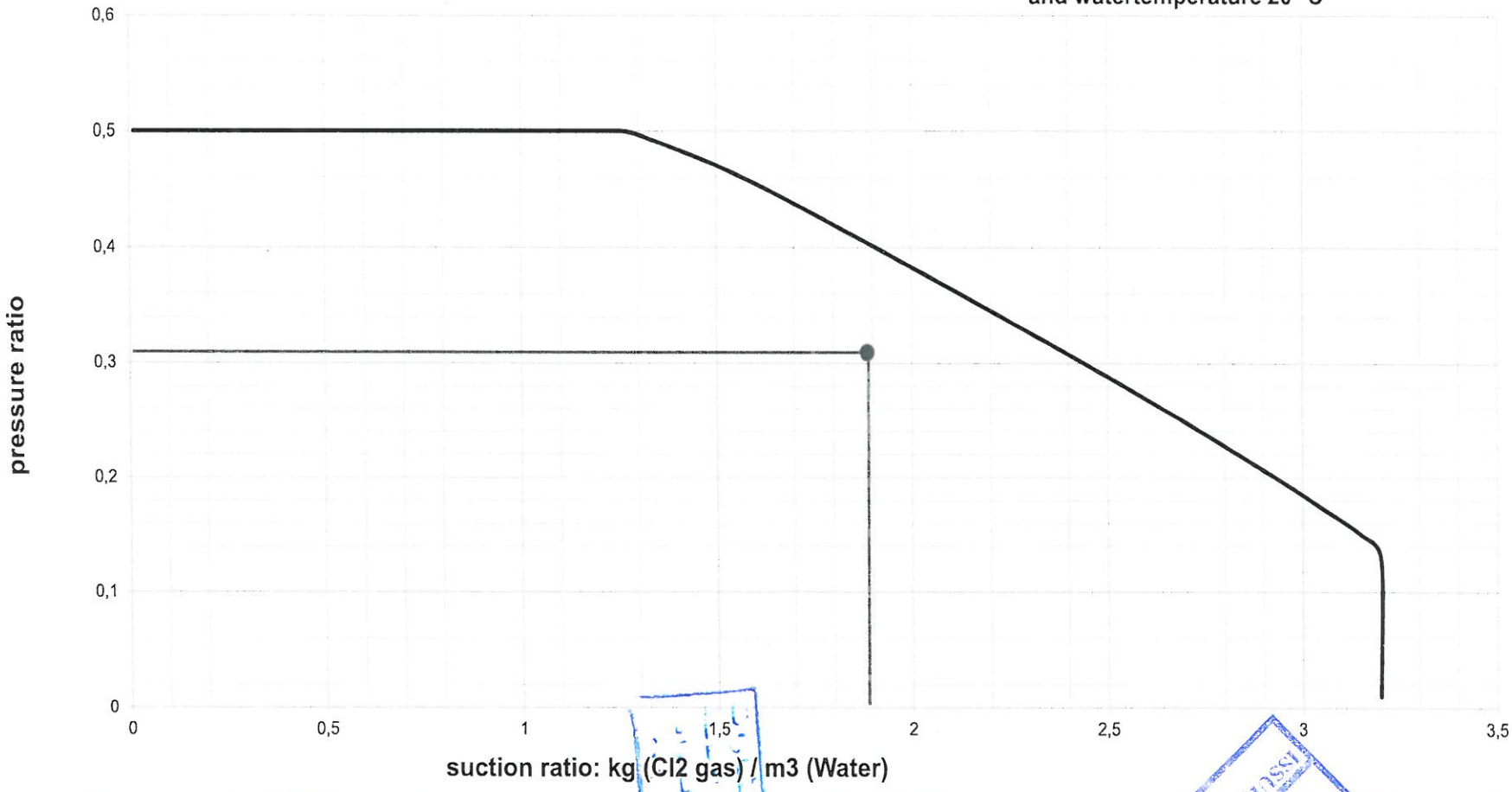

$$\text{pressure ratio} = \frac{\text{discharge pressure - suction pressure}}{\text{motive pressure - suction pressure}} = \frac{3 \text{ bar abs - 0.8 bar abs}}{8 \text{ bar abs - 0.8 bar abs}} = 0.31$$

$$\text{suction ratio} = \frac{\text{suction flow}}{\text{motive flow}} = \frac{85 \text{ kg/h Cl2 gas}}{45 \text{ m3/h water}} = 1.89$$

4.17 Caustic Soda Pump

3 - 3L SERIES

CENTRIFUGAL ELECTRIC PUMPS STANDARDISED IN COMPLIANCE WITH EN 733 (EX DIN 24255)

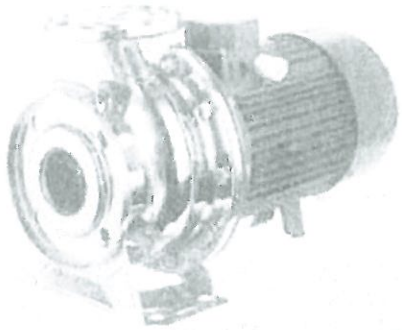

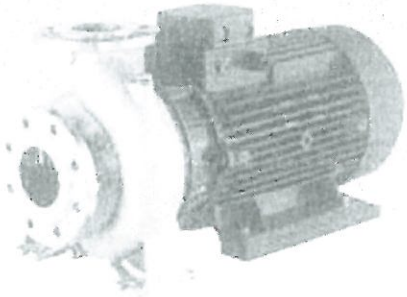

Available in 4 versions with 2 and 4 pole motors

Monobloc with extended motor shaft

Monobloc with standard motor and rigid joint

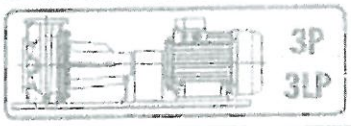

On base, with standard motor and flexible coupling

Pump with bare shaft

SPECIAL VERSIONS

- Also available with high efficiency IE3 motors for 3(L)S SERIES and 3(L)P SERIES 2 and 4 poles

ACCESSORIES (On request)

- Counter-flanges available in the following materials:
  - galvanised
  - AISI 304
  - AISI 316

Standardised centrifugal electric pumps built in stainless steel AISI 304 (3 SERIES) and AISI 316L (3L SERIES).

APPLICATIONS

- Water supply to civil, agricultural and industrial plants
- Pressure boosting
- Fire-fighting, heating systems and air-conditioning
- Moving industrial liquids
- Irrigation
- Refrigeration towers
- Swimming pools
- Emptying
- Washing plants

TECHNICAL DETAILS

- Highly resistant construction
- Hydroforming process EBARA patent

PUMP TECHNICAL DATA

- Maximum working pressure: 10 bar
- Maximum temperature of the liquid:
  - -10°C ÷ +90°C
  - -10°C ÷ +110°C (L-H-HS-HM-HSWE versions)
  - -10°C ÷ +120°C (ES version)
- MEI >0,4 for 3(L) SERIES 2 poles, MEI >0,4 for 3(L) SERIES 4 poles
  For further information please see our Data Book on the web site www.ebaraeurope.com

MOTOR TECHNICAL DATA

- High efficiency IE2 motors starting from 0,75kW
- Self-ventilated 2 and 4 poles asynchronous motor
- Class of insulation F (B for high temperatures)
- IP 55 protection degree
- 230V ±10% single phase voltage, 50Hz
- 220-240/380-415V ±5% (up to 0,55kW included) three phase voltage, 50Hz for 3(L)M4 SERIES
- 230/400V ±10% (from 0,75kW to 4kW included) three phase voltage, 50Hz for 3(L)M4 SERIES
- 230/400V ±10% (up to 4kW included) three phase voltage, 50Hz for the rest of the range
- 400/690V ±10% (from 5,5 kW and above) three phase voltage, 50Hz
- Protection is user's responsibility

MATERIALS

- Pump casing and casing cover in:
  - AISI 304 for 3 SERIES 32-125/160/200
    40-125/160/200
    50-125/160
    65-125/160/200
  - AISI 316L for 3L SERIES 32-125/160/200
    40-125/160/200
    50-125/160
    65-125/160/200
  - AISI 316 microcasted for 3L SERIES 65-250
    80-160/200/250
- Impeller in:
  - AISI 304 for 3 SERIES 32-125/160/200
    40-125/160/200
    50-125/160
  - AISI 316L for 3L SERIES 32-125/160/200
    40-125/160/200
    50-125/160
  - AISI 316 microcasted for 3 SERIES 65-125/160/200
    3L SERIES 65-125/160/200
    65-250
    80-160/200/250
- Mechanical seal standard in:
  - Carbon/Ceramic/NBR for 3 SERIES 32-125/160/200
    40-125/160/200
    50-125/160
    65-125/160/200
  - SiC/SiC/FPM for 3L SERIES 32-125/160/200
    40-125/160/200
    50-125/160
    65-125/160/200/250
    80-160/200/250
  - Special mechanical seals available on request

3 - 3L SERIES

CENTRIFUGAL ELECTRIC PUMPS STANDARDISED IN COMPLIANCE WITH EN 733 (EX DIN 24255)

IDENTIFICATION CODE - 2 Poles

3 SERIES | L | M | F | H | 65 - 160 / 22 | M

- M: Single phase
- 22: Motor power in kW
- 160: Impeller diameter — 125, 160, 200, 250
- 65: Discharge size — 32, 40, 50, 65, 80
- H: Optional version — H, HS, HW, HSW, E, ES
- F: Hydraulic part
- M: Model — M, S, P
- L: Version in AISI 316
- 3 SERIES: Pump name

IDENTIFICATION CODE - 4 Poles

3 SERIES | L | M | F | 4 | H | 65 - 160 / 22 | M | R

- R: Reduced impeller
- M: Single phase
- 22: Motor power in kW
- 160: Impeller diameter — 125, 160, 200, 250
- 65: Discharge size — 32, 40, 50, 65, 80
- H: Optional version — H, HS, HW, HSW, E
- 4: 4 poles motors
- F: Hydraulic part
- M: Model — M, S, P
- L: Version in AISI 316
- 3 SERIES: Pump name

3 - 3L SERIES

CENTRIFUGAL ELECTRIC PUMPS STANDARDISED IN COMPLIANCE WITH EN 733 (EX DIN 24255)

PERFORMANCE CURVES 3(L)M-3(L)S-3(L)P-40 SERIES at 2900 r/m (according to ISO 9906 Attachment A) 2 Poles

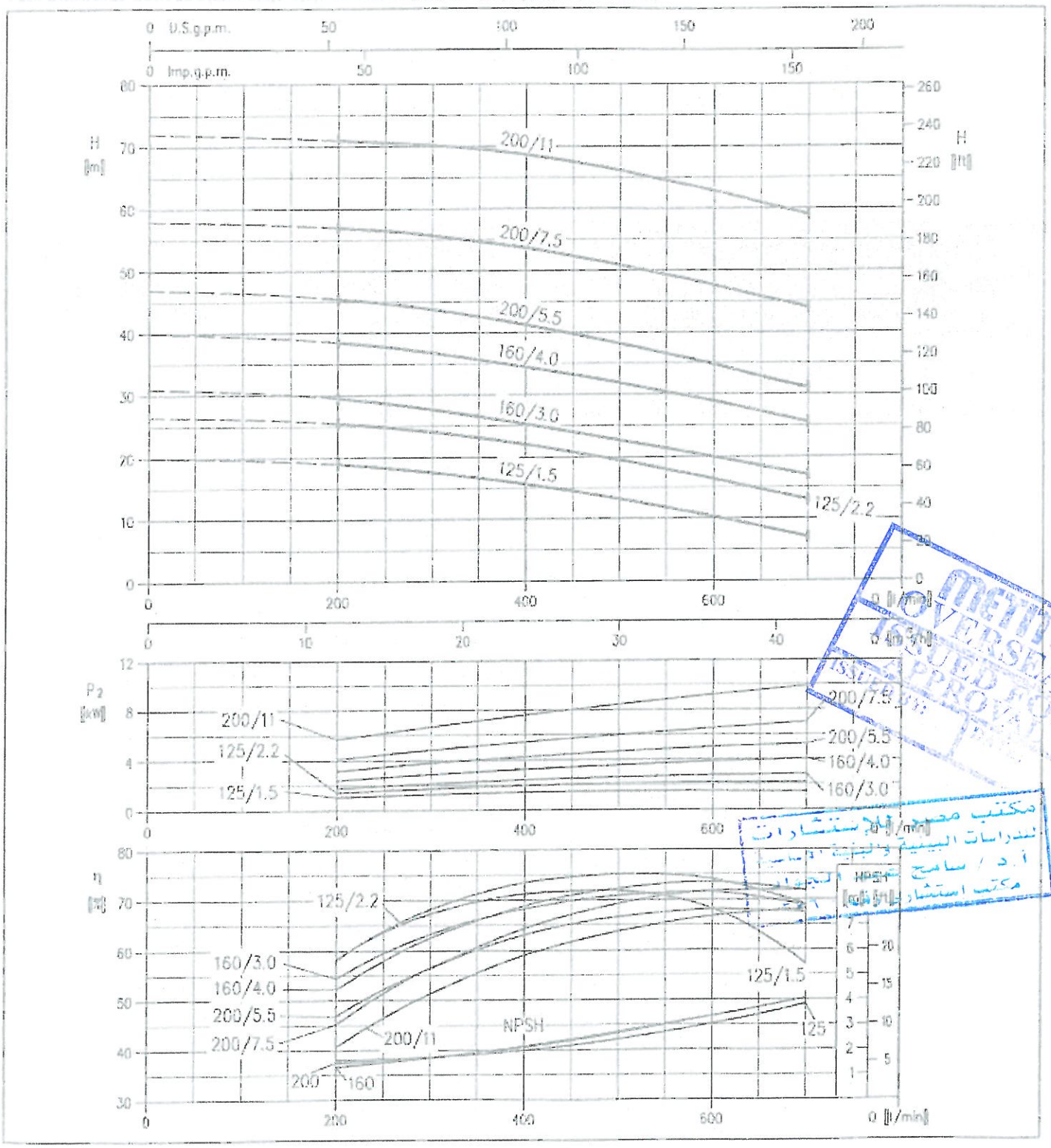

EBARA

3 - 3L SERIES

CENTRIFUGAL ELECTRIC PUMPS STANDARDISED IN COMPLIANCE WITH EN 733 (EX DIN 24255)

3(L)M 32, 40, 50, 65 - up to 11 kW — 2 Poles

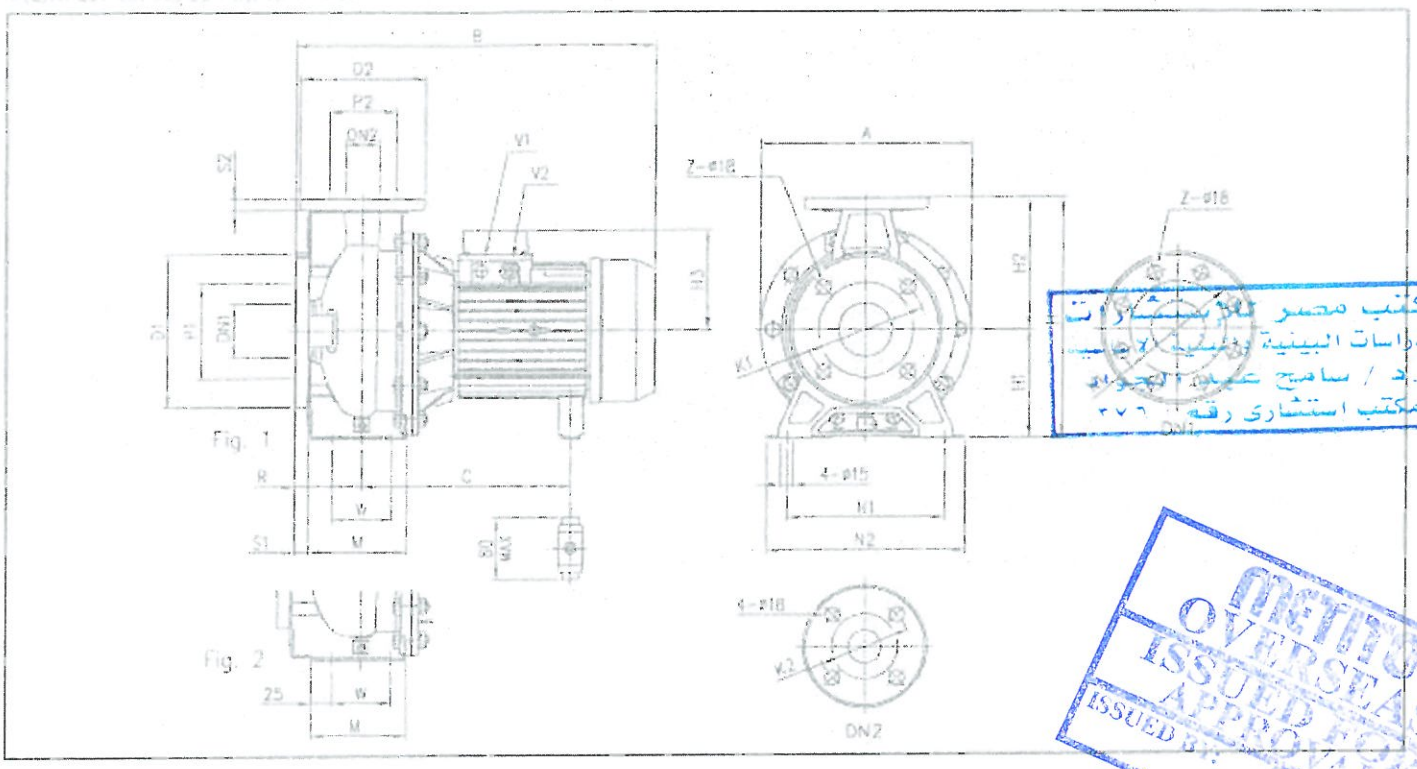

DIMENSIONAL TABLE

Model	DN1	P1	K1	D1	S1	Z		DN2	P2	K2	D2	S2	Fig.	H	H1	H2	H3	R	W	M	N1	N2	A	B		C		V1	V2		Weight
														Dimensions (mm)																	(kg)
	Ø	Ø	Ø	Ø		(1)	(2)	Ø	Ø	Ø	Ø						(3)	(4)						(4)	(3)	(4)	(3)	(3)	(3)	(4)	(3)
32-125/1.1 (M)	50	95	125	165	16	4	-	32	75	100	140	14	1	252	112	140	124	141	80	70	114	140	190	213	408	407	219÷230	219÷230	-	PG 13,5	M20x1,5	19,0	24,1
32-160/1.5 (M)	50	95	125	165	16	4	-	32	75	100	140	14	1	292	132	160	124	141	80	70	118	190	240	254	408	407	219÷230	219÷230	-	PG 13,5	M20x1,5	22,7	27,0
32-160/2.2 (M)	50	95	125	165	16	4	-	32	75	100	140	14	1	292	132	160	124	141	80	70	118	190	240	254	408	432	219÷230	244÷255	-	PG 13,5	M20x1,5	22,7	28,0
32-200/3.0	50	95	125	165	16	4	-	32	75	100	140	14	1	340	160	180	124	-	80	70	119	190	240	296	-	471	-	244÷255	-	PG 13,5	-	-	35,1
32-200/4.0	50	95	125	165	16	4	-	32	75	100	140	14	1	340	160	180	141	-	80	70	119	190	240	296	-	494	-	253	-	PG 16	-	-	38,2
32-200/5.5	50	95	125	165	16	4	-	32	75	100	140	14	1	340	160	180	150	-	80	70	119	190	240	296	-	519	-	275	PG 13,5	PG 16	-	-	52,2
32-200/7.5	50	95	125	165	16	4	-	32	75	100	140	14	1	340	160	180	150	-	80	70	119	190	240	296	-	519	-	275	PG 13,5	PG 16	-	-	57,4
40-125/1.5 (M)	65	115	145	185	16	4	-	40	80	110	150	14	1	252	112	140	124	141	80	70	114	160	210	213	408	407	219÷230	219÷230	-	PG 13,5	M20x1,5	20,1	24,6
40-125/2.2 (M)	65	115	145	185	16	4	-	40	80	110	150	14	1	252	112	140	124	141	80	70	114	160	210	213	408	432	219÷230	244÷255	-	PG 13,5	M20x1,5	25,8	26,1
40-160/3.0	65	115	145	185	16	4	-	40	80	110	150	14	1	292	132	160	124	-	80	70	118	190	240	254	-	471	-	244÷255	-	PG 13,5	-	-	36,6
40-160/4.0	65	115	145	185	16	4	-	40	80	110	150	14	1	292	132	160	141	-	80	70	118	190	240	254	-	494	-	253	-	PG 16	-	-	40,8
40-200/5.5	65	115	145	185	16	4	-	40	80	110	150	14	2	340	160	180	150	-	100	70	115	212	265	296	-	539	-	275	PG 13,5	PG 16	-	-	52,5
40-200/7.5	65	115	145	185	16	4	-	40	80	110	150	14	2	340	160	180	150	-	100	70	115	212	265	296	-	539	-	275	PG 13,5	PG 16	-	-	56,2
40-200/11	65	115	145	185	16	4	-	40	80	110	150	14	2	340	160	180	178	-	100	70	115	212	265	296	-	595	-	359	PG 13,5	PG 21	-	-	67,2
50-125/2.2 (M)	65	115	145	185	16	4	-	50	95	125	165	16	2	292	132	160	124	141	100	70	114	190	240	254	428	432	219÷230	244÷255	-	PG 13,5	M20x1,5	29,4	32,0
50-125/3.0	65	115	145	185	16	4	-	50	95	125	165	16	2	292	132	160	124	-	100	70	114	190	240	254	-	491	-	244÷255	-	PG 13,5	-	-	30,5
50-125/4.0	65	115	145	185	16	4	-	50	95	125	165	16	2	292	132	160	141	-	100	70	114	190	240	254	-	514	-	253	-	PG 16	-	-	40,9
50-160/5.5	65	115	145	185	16	4	-	50	95	125	165	16	2	340	160	180	150	-	100	70	115	212	265	296	-	539	-	275	PG 13,5	PG 16	-	-	46,5
50-160/7.5	65	115	145	185	16	4	-	50	95	125	165	16	2	340	160	180	150	-	100	70	115	212	265	296	-	539	-	275	PG 13,5	PG 16	-	-	55,5
50-200/9.2	65	115	145	185	16	4	-	50	95	125	165	16	2	360	160	200	178	-	100	70	115	212	265	296	-	595	-	359	PG 13,5	PG 21	-	-	63,5
50-200/11	65	115	145	185	16	4	-	50	95	125	165	16	2	360	160	200	178	-	100	70	115	212	265	296	-	595	-	359	PG 13,5	PG 21	-	-	67,2
65-125/4	80	134	160	200	18	8	4	65	115	145	185	16	2	340	160	180	141	-	100	95	140	212	280	254	-	514	-	253	-	PG 16	-	-	37,7
65-125/5.5	80	134	160	200	18	8	4	65	115	145	185	16	2	340	160	180	150	-	100	95	140	212	280	254	-	539	-	275	PG 13,5	PG 16	-	-	46,7
65-125/7.5	80	134	160	200	18	8	4	65	115	145	185	16	2	340	160	180	150	-	100	95	140	212	280	254	-	539	-	275	PG 13,5	PG 16	-	-	49,0
65-160/9.2	80	134	160	200	18	8	4	65	115	145	185	16	2	360	160	200	150	-	100	95	140	212	280	296	-	539	-	275	PG 13,5	PG 16	-	-	62,2
65-160/9.2	80	134	160	200	18	8	4	65	115	145	185	16	2	360	160	200	178	-	100	95	140	212	280	296	-	595	-	359	PG 13,5	PG 21	-	-	61,0
65-160/11	80	134	160	200	18	8	4	65	115	145	185	16	2	360	160	200	178	-	100	95	140	212	280	296	-	595	-	359	PG 13,5	PG 21	-	-	65,0

(1) Standard
(2) On request
(3) Three phase only
(4) Single phase only

EBARA

3 - 3L SERIES

CENTRIFUGAL ELECTRIC PUMPS STANDARDISED IN COMPLIANCE WITH EN 733 (EX DIN 24255)

PERFORMANCE TABLE 32-40-50

2 Poles

Model	P_2 [HP]	P_2 [kW]	Q=Flow rate l/min	100	150	200	300	333	360	400	450	500	600	700	800	1000	1200
			m³/h	6	9	12	18	20	22	24	27	30	36	42	48	60	72
			H=Head [m]														
3 SERIES( ) 32-125/1.1(M)	1,5	1,1		21,0	19,9	18,4	14,1	12,0	-	-	-	-	-	-	-	-	-
3 SERIES( ) 32-160/1.5(M)	2	1,5		28,0	26,5	24,5	19,2	17,0	-	-	-	-	-	-	-	-	-
3 SERIES( ) 32-160/2.2(M)	3	2,2		35,5	34,0	32,0	27,0	25,0	-	-	-	-	-	-	-	-	-
3 SERIES( ) 32-200/3.0	4	3		42,0	40,0	37,5	31,0	28,0	-	-	-	-	-	-	-	-	-
3 SERIES( ) 32-200/4.0	5,5	4		53,5	52,0	49,5	43,5	40,5	38,0	-	-	-	-	-	-	-	-
3 SERIES( ) 32-200/5.5	7,5	5,5		69,0	67,5	65,0	58,5	-	-	-	-	-	-	-	-	-	-
3 SERIES( ) 32-200/7.5	10	7,5		69,0	67,5	65,0	58,5	55,5	53,0	49,0	44,0	-	-	-	-	-	-
3 SERIES( ) 40-125/1.5(M)	2	1,5		-	-	19,0	17,8	17,0	16,5	15,7	14,5	13,2	10,3	7,0	-	-	-
3 SERIES( ) 40-125/2.2(M)	3	2,2		-	-	25,5	24,0	23,5	23,0	22,0	21,0	19,5	16,4	13,0	-	-	-
3 SERIES( ) 40-160/3.0	4	3		-	-	29,5	27,5	27,0	26,5	25,5	24,0	22,5	20,0	17,0	-	-	-
3 SERIES( ) 40-160/4.0	5,5	4		-	-	38,5	37,0	36,0	35,5	34,5	33,0	32,0	29,0	25,5	-	-	-
3 SERIES( ) 40-200/5.5	7,5	5,5		-	-	45,5	44,0	43,0	42,5	41,0	39,5	38,0	35,0	31,0	-	-	-
3 SERIES( ) 40-200/7.5	10	7,5		-	-	57,0	55,5	55,0	54,5	53,5	52,5	51,0	47,5	44,0	-	-	-
3 SERIES( ) 40-200/11	15	11		-	-	71,0	70,0	70,0	69,5	68,5	67,5	66,0	63,0	59,0	-	-	-
3 SERIES( ) 50-125/2.2(M)	3	2,2		-	-	-	-	-	-	17,5	17,0	16,3	14,9	13,4	11,7	8,0	-
3 SERIES( ) 50-125/3.0	4	3		-	-	-	-	-	-	20,5	20,0	19,6	18,4	17,0	15,4	11,8	8,0
3 SERIES( ) 50-125/4.0	5,5	4		-	-	-	-	-	-	26,0	25,5	25,0	24,0	22,5	21,5	17,9	14,0
3 SERIES( ) 50-160/5.5	7,5	5,5		-	-	-	-	-	-	31,0	30,5	30,0	28,5	27,0	25,5	22,0	18,0
3 SERIES( ) 50-160/7.5	10	7,5		-	-	-	-	-	-	38,5	38,0	37,5	36,0	35,0	33,5	30,0	26,0
3 SERIES( ) 50-200/9.2	12,5	9,2		-	-	-	-	-	-	-	-	50,0	49,0	47,5	45,5	40,5	34,0
3 SERIES( ) 50-200/11	15	11		-	-	-	-	-	-	-	-	56,0	55,0	54,0	52,0	48,0	42,0
3 SERIES( ) 50-200/15	20	15		-	-	-	-	-	-	-	-	70,0	69,0	68,0	66,0	62,0	57,0

(M) single phase version only for 3M SERIES

PERFORMANCE TABLE 65-80

2 Poles

Model	P_2 [HP]	P_2 [kW]	Q=Flow rate l/min	600	700	900	1300	1500	1700	1900	2100	2200	2300	2400	2500	3000	3400	3600	3800	4000
			m³/h	36	42	54	78	90	102	114	126	132	138	144	150	180	204	216	228	240
			H=Head [m]																	
3 SERIES( ) 65-125/4.0	5,5	4		19,8	19,0	17,3	13,3	11,0	8,6	6,3	-	-	-	-	-	-	-	-	-	-
3 SERIES( ) 65-125/5.5	7,5	5,5		-	24,0	22,2	18,0	15,7	13,3	10,8	8,0	-	-	-	-	-	-	-	-	-
3 SERIES( ) 65-125/7.5	10	7,5		-	29,5	27,8	23,5	21,1	18,7	16,1	13,4	12,0	-	-	-	-	-	-	-	-
3 SERIES( ) 65-160/7.5	10	7,5		-	30,0	28,6	24,8	22,5	19,9	17,1	14,2	-	-	-	-	-	-	-	-	-
3 SERIES( ) 65-160/9.2	12,5	9,2		-	34,5	32,9	28,8	26,5	23,9	21,1	18,3	16,8	-	-	-	-	-	-	-	-
3 SERIES( ) 65-160/11	15	11		-	38,5	37,1	33,1	30,9	28,4	25,8	23,0	21,5	20,0	-	-	-	-	-	-	-
3 SERIES( ) 65-160/15	20	15		-	45,5	44,0	40,0	37,8	35,3	32,6	29,6	28,0	26,5	-	-	-	-	-	-	-
3 SERIES( ) 65-200/15	20	15		-	51,0	49,0	44,0	41,5	38,4	35,3	31,8	30,0	-	-	-	-	-	-	-	-
3 SERIES( ) 65-200/18.5	25	18,5		-	58,5	56,5	51,5	49,0	46,0	43,0	39,7	38,0	36,3	-	-	-	-	-	-	-
3 SERIES( ) 65-200/22	30	22		-	63,5	64,0	59,5	57,0	54,0	51,0	48,0	46,5	45,0	-	-	-	-	-	-	-
3 SERIES( ) 65-250/30	40	30		-	-	77,0	73,5	71,0	68,0	64,5	60,0	57,5	55,0	52,0	-	-	-	-	-	-
3 SERIES( ) 65-250/37	50	37		-	-	88,0	85,5	83,0	80,5	77,5	74,0	72,0	70,0	67,5	65,0	-	-	-	-	-
3 SERIES( ) 80-160/11	15	11		-	-	-	27,3	26,4	25,4	24,2	23,0	22,4	21,8	21,1	20,4	16,4	12,5	-	-	-
3 SERIES( ) 80-160/13	17,5	13		-	-	-	30,5	29,7	28,8	27,7	26,5	25,8	25,3	24,6	24,0	20,1	16,5	14,5	-	-
3 SERIES( ) 80-160/15R	20	15		-	-	-	30,5	29,7	28,8	27,7	26,5	25,9	25,3	24,6	24,0	20,1	16,5	14,5	-	-
3 SERIES( ) 80-160/15	20	15		-	-	-	34,0	33,3	32,5	31,5	30,5	30,0	29,4	28,8	28,1	24,4	21,0	19,1	17,0	-
3 SERIES( ) 80-160/18.5	25	18,5		-	-	-	39,0	38,4	37,6	36,7	35,7	35,2	34,7	34,1	33,5	30,0	26,4	24,4	22,3	20,0
3 SERIES( ) 80-200/22	30	22		-	-	-	48,0	47,0	46,5	44,5	43,0	42,0	41,0	40,0	39,0	35,5	32,8	29,0	-	-
3 SERIES( ) 80-200/30	40	30		-	-	-	58,5	58,0	57,0	56,0	54,5	54,0	53,0	52,0	51,0	46,5	41,5	39,0	36,1	33,0
3 SERIES( ) 80-200/37	50	37		-	-	-	64,0	63,0	62,0	61,0	59,5	59,0	58,0	57,5	56,5	51,5	47,0	44,5	41,5	38,5
3 SERIES( ) 80-250/37	50	37		-	-	-	71,5	70,5	68,5	66,5	64,0	63,0	61,5	60,0	58,5	48,5	38,0	-	-	-
3 SERIES( ) 80-250/45	60	45		-	-	-	82,5	81,5	80,0	78,0	76,0	75,0	73,5	72,5	71,0	62,0	53,0	48,5	42,5	-
3 SERIES( ) 80-250/55	75	55		-	-	-	93,5	92,5	91,5	90,0	88,5	87,5	86,5	85,5	84,0	76,0	68,5	64,5	60,0	55,0

4.18 Centrifugal Fans

CENTRIFUGAL SINGLE INLET FANS

CMB / CMT Series

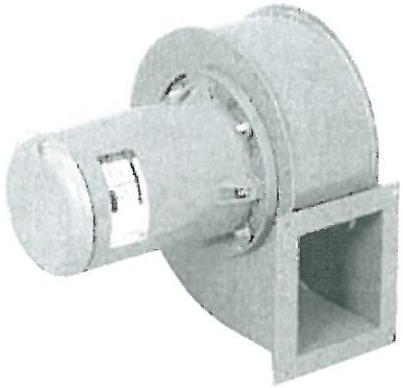

CMT series 1

CONTINUOUS operation

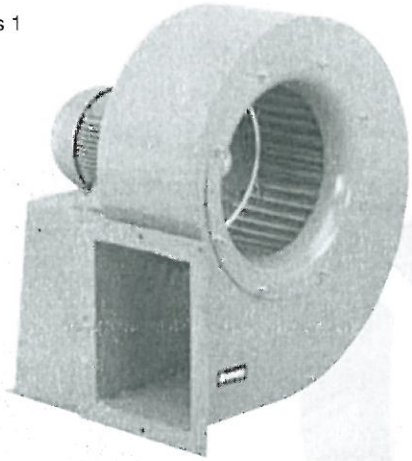

CMT series 2 and 3

CONTINUOUS operation

Range of centrifugal single inlet fans suitable for **continuous extraction of airstreams temperature up to 80°C** (Series 1) **or 150°C** (Series 2 and 3).

All casings are manufactured from electro-welded **sheet steel protected against corrosion by grey epoxy-polyester paint coating.**

All models incorporate forward curved centrifugal impellers manufactured from galvanised sheet steel.

Available, depending upon the model, with single or three phase motors in 2, 4 or 6 poles.

Motors

All motors are IP55, Class F (1) with ball bearings greased for life.

Electrical supply:

- Single phase 230V- 50Hz.
- Three phase 230/400V-50Hz up to 3kW.
- Three phase 400V-50Hz, for higher power motors.
- (See characteristics chart).

Series 1 are equipped with B14 flange mounted motor.

Series 2 & 3 are equipped with B3 foot mounted motor.

(1) Series 1: Some motors are IP44. Class B (See characteristics chart).

Additional Information

The scroll can be orientated in 8 different positions as per the table below.

Standard supplied position: LG 270

On request

Fan supplied in RD positions.

Fan fitted with 2-speed motor.

Stainless steel versions INOX-304 or 316.

Explosion proof versions in accordance to ATEX Directive for three phase models up to 11 kW (Except series 1, 4 pole motors, 120, 140, 160 and 200/060 models) :

- **Increase safety** Ex II2G EExe IIT3
- **Flame proof** Ex II2G EExd IIBT5 or EExd IICT4.

Working temperatures up to 40°C

Impeller dynamically balanced

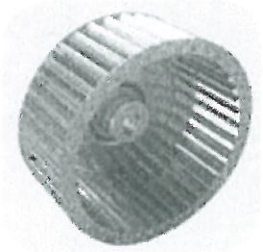

Forward curved centrifugal impellers **dynamically balanced**, according to ISO 1940 standard, providing vibration free operation

APPLICATIONS

Commercial or industrial drying installations

Iron and steel industries Foundries

Cooling of motors, compressors or other electrical machines

Welding installations

Car industry/ Furnace ventilation

CONTINUOUS operation Series 1

CONTINUOUS operation Series 2 and 3

POSITIONS

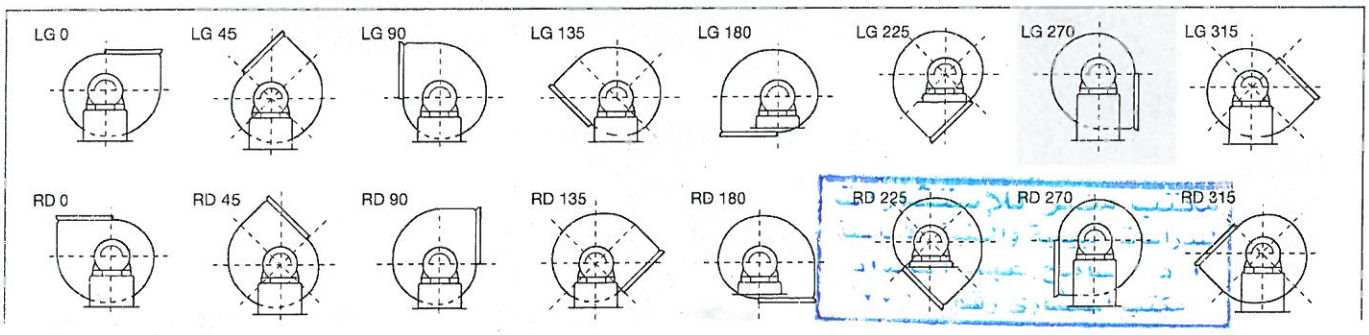

Technical characteristics

Before installation check that the product electrical characteristics listed on the data plate label (Voltage, power, frequency etc) match those of the intended electrical supply. Explosion proof types only work at an ambient temperature between -30°C and +40°C.

Series 1	Speed (r.p.m.)	Protection	Motor Ins. Class	Motor power (kW)	Maximum absorbed current (A) at 230 V	Maximum absorbed current (A) at 400 V	Maximum air volume (m^3/h)	Sound power level (dB(A))	Weight (Kg)	Speed controller (*)
SINGLE PHASE 2 POLE										
CMB/2-120/50 - 0,09	2800	IP44	B	0,09	0,70	–	495	62	4,0	–
CMB/2-140/50 - 0,25	2800	IP55	F	0,25	2,00	–	870	66	8,5	–
CMB/2-160/60 - 0,37	2800	IP55	F	0,37	2,80	–	1120	69	9,5	–
CMB/2-180/75 - 0,75	2800	IP55	F	0,75	4,90	–	1800	71	14,7	–
CMB/2-200/60 - 0,37	2800	IP55	F	0,37	2,80	–	935	69	9,5	–
CMB/2-200/80 - 1,1	2800	IP55	F	1,1	7,30	–	2270	74	17,3	–
SINGLE PHASE 4 POLE										
CMB/4-120/50 - 0,01	1400	IP44	B	0,01	0,21	–	270	55	3,7	REB-1N
CMB/4-140/50 - 0,06	1400	IP44	B	0,06	0,35	–	450	59	7,0	REB-1N
CMB/4-160/60 - 0,07	1400	IP44	B	0,07	0,60	–	665	62	7,0	REB-1N
CMB/4-180/75 - 0,18	1400	IP55	F	0,18	1,45	–	1030	64	10,0	–
CMB/4-200/60 - 0,07	1400	IP44	B	0,07	0,60	–	555	62	7,0	–
CMB/4-200/80 - 0,25	1400	IP55	F	0,25	2,50	–	1560	67	13,0	–
THREE PHASE 2 POLE										
CMT/2-120/50 - 0,09	2800	IP44	B	0,09	0,54	0,32	495	62	4,0	RMT-1,5
CMT/2-140/50 - 0,25	2800	IP55	F	0,25	1,00	0,60	870	66	8,5	VFTM TRI 0,37
CMT/2-160/60 - 0,37	2800	IP55	F	0,37	1,80	1,05	1120	69	9,5	VFTM TRI 0,37
CMT/2-180/75 - 0,75	2800	IP55	F	0,75	3,30	1,90	1800	71	14,7	VFTM TRI 0,75
CMT/2-200/60 - 0,37	2800	IP55	F	0,37	1,80	1,05	935	69	9,5	VFTM TRI 0,37
CMT/2-200/80 - 1,1	2800	IP55	F	1,1	4,67	2,70	2270	74	17,3	VFTM TRI 1,1
THREE PHASE 4 POLE										
CMT/4-120/50 - 0,01	1400	IP44	B	0,01	0,20	0,12	270	55	3,7	RMT-1,5
CMT/4-140/50 - 0,06	1400	IP44	B	0,06	0,32	0,18	450	59	7,0	RMT-1,5
CMT/4-160/60 - 0,07	1400	IP44	B	0,07	0,58	0,33	665	62	7,0	RMT-1,5
CMT/4-180/75 - 0,18	1400	IP55	F	0,18	0,90	0,52	1030	64	10,0	VFTM TRI 0,37
CMT/4-200/60 - 0,07	1400	IP44	B	0,07	0,58	0,33	555	62	7,0	VFTM TRI 0,37
CMT/4-200/80 - 0,25	1400	IP55	F	0,25	1,26	0,73	1560	67	13,0	VFTM TRI 0,37

* Three phase speed controllers (RMT) are suitable for 400V.

Technical characteristics

Before installation check that the product electrical characteristics listed on the data plate label (Voltage, power, frequency etc) match those of the intended electrical supply. Explosion proof types only work at an ambient temperature between -30°C and +40°C.

Series 2	Speed (r.p.m.)	Protection	Motor Ins. Class	Motor power (kW)	Maximum absorbed current (A) at 230 V	Maximum absorbed current (A) at 400 V	Maximum air volume (m^3/h)	Sound power level (dB(A))	Weight (Kg)	Antivibration mount type (KSE)	Speed controller (*)
THREE PHASE 2 POLE											
CMT/2-225/ 90 - 1,1	2780	IP55	F	1,1	4,70	2,70	2080	66	23,0	45	VFTM TRI 1,1
CMT/2-225/ 90 - 1,5	2800	IP55	F	1,5	5,96	3,45	2170	71	27,5	45	VFTM TRI 1,5
CMT/2-225/ 90 - 2,2	2820	IP55	F	2,2	8,50	4,90	3040	76	29,7	45	VFTM TRI 2,2
CMT/2-250/100 - 2,2	2820	IP55	F	2,2	8,50	4,90	2080	73	34,5	45	VFTM TRI 2,2
CMT/2-250/100 - 3	2820	IP55	F	3	10,90	6,30	3685	79	36,5	45	VFTM TRI 3
CMT/2-280/115 - 3	2820	IP55	F	3	10,90	6,30	2600	77	43,0	45	VFTM TRI 3
CMT/2-280/115 - 4	2870	IP55	F	4	–	8,40	3210	81	47,0	45	VFTM TRI 4
THREE PHASE 4 POLE											
CMT/4-225/ 90 - 0,55	1390	IP55	F	0,55	2,85	1,65	2600	71	22,0	45	VFTM TRI 0,55
CMT/4-250/100 - 1,1	1390	IP55	F	1,1	4,80	2,80	3790	72	32,0	45	VFTM TRI 1,1
CMT/4-280/115 - 2,2	1400	IP55	F	2,2	9,10	5,30	5200	75	43,0	45	VFTM TRI 2,2
CMT/4-315/130 - 2,2	1400	IP55	F	2,2	9,10	5,30	5660	72	48,0	45	VFTM TRI 2,2
CMT/4-315/130 - 3	1400	IP55	F	3	12,60	7,30	6800	75	51,5	45	VFTM TRI 4
CMT/4-315/130 - 4	1420	IP55	F	4	–	9,30	7100	78	57,5	70	VFTM TRI 4
THREE PHASE 6 POLE											
CMT/6-315/130 - 1,1	930	IP55	F	1,1	6,6	3,8	5400	69	44	45	VFTM TRI 1,5

* Three phase speed controllers (RMT) are suitable for 400V.

Series 3	Speed (r.p.m.)	Protection	Motor Ins. Class	Motor power (kW)	Maximum absorbed current (A) at 230 V	Maximum absorbed current (A) at 400 V	Maximum air volume (m^3/h)	Sound power level (dB(A))	Weight (Kg)	Antivibration mount type (KSE)	Speed controller (*)
THREE PHASE 4 POLE											
CMT/4-355/145 - 3	1400	IP55	F	3	12,65	7,30	6325	75	52,0	45	VFTM TRI 4
CMT/4-355/145 - 4	1420	IP55	F	4	–	9,30	7740	78	58,0	70	VFTM TRI 4
CMT/4-355/145 - 5,5	1445	IP55	F	5,5	–	12,00	9450	81	68,7	70	VFTM TRI 5,5
CMT/4-400/165 - 4	1420	IP55	F	4	–	9,30	7200	77	70,0	70	VFTM TRI 4
CMT/4-400/165 - 5,5	1445	IP55	F	5,5	–	12,00	8300	80	80,0	70	VFTM TRI 5,5
CMT/4-400/165 - 7,5	1445	IP55	F	7,5	–	15,50	10460	83	99,0	70	VFTM TRI 7,5
CMT/4-450/185 - 5,5	1445	IP55	F	5,5	–	12,00	7560	83	92,0	70	VFTM TRI 5,5
CMT/4-450/185 - 7,5	1445	IP55	F	7,5	–	15,50	9900	86	111,0	70	VFTM TRI 7,5
CMT/4-500/205 - 7,5	1445	IP55	F	7,5	–	15,50	8410	83	112,0	70	VFTM TRI 7,5
CMT/4-500/205 - 9,2	1450	IP55	F	9,2	–	21,50	10300	85	120,0	70	VFTM TRI 11
CMT/4-500/205 - 11	1450	IP55	F	11	–	22,50	11250	87	132,0	70	VFTM TRI 11
CMT/4-500/205 - 15	1460	IP55	F	15	–	31,00	15930	89	147,0	70	VFTM TRI 15
THREE PHASE 6 POLE											
CMT/6-355/145 - 1,5	945	IP55	F	1,5	7,5	4,3	6700	72	53	45	VFTM TRI 2,2
CMT/6-400/165 - 2,2	920	IP55	F	2,2	10,74	6,20	7590	73	60,5	70	VFTM TRI 3
CMT/6-450/185 - 2,2	920	IP55	F	2,2	10,74	6,20	7110	76	88,0	70	VFTM TRI 3

ATTENTION: The ratings of sound levels are pressure values measured in dB(A) at 1,5 m at 2/3 Qmax.
* Three phase speed controllers (RMT) are suitable for 400V.

Acoustic characteristics

Sound power level spectrum in dB(A) at the corresponding frequency band in Hz.

	SOUND POWER SPECTRUM								TOTAL	
Description	63 Hz	125 Hz	250 Hz	500 Hz	1000 Hz	2000 Hz	4000 Hz	8000 Hz	Power	Pressure
2 POLE									2 POLE	
CMT/2-120/50 - 0,09	42	53	64	68	70	73	69	67	77	63
CMT/2-140/50 - 0,25	46	57	68	71	73	77	73	71	81	66
CMT/2-160/60 - 0,37	48	60	71	74	76	80	75	73	84	69
CMT/2-180/75 - 0,75	51	62	73	76	78	82	78	76	86	71
CMT/2-200/60 - 0,37	49	60	71	74	76	80	76	74	84	69
CMT/2-200/80 - 1,1	53	65	76	79	81	85	80	79	89	74
CMT/2-225/90 - 1,1	46	57	68	71	73	77	73	71	81	66
CMT/2-225/90 - 1,5	51	62	73	76	78	82	78	76	86	71
CMT/2-225/90 - 2,2	56	67	78	81	83	87	83	81	91	76
CMT/2-250/100 - 2,2	53	64	75	78	80	84	80	78	88	73
CMT/2-250/100 - 3	58	69	80	84	86	89	85	83	93	79
CMT/2-280/115 - 3	56	67	78	82	84	87	83	81	91	77
CMT/2-280/115 - 4	61	72	83	86	88	92	88	86	96	81
4 POLE									4 POLE	
CMT/4-120/50 - 0,01	39	52	58	59	64	65	61	58	70	55
CMT/4-140/50 - 0,06	43	56	62	63	68	69	65	62	74	59
CMT/4-160/60 - 0,07	46	59	65	66	71	72	68	65	77	62
CMT/4-180/75 - 0,18	48	61	67	68	73	74	70	67	79	64
CMT/4-200/60 - 0,07	46	59	65	66	71	72	68	65	76,6	62
CMT/4-200/80 - 0,25	51	64	70	71	76	77	73	70	82	67
CMT/4-225/90 - 0,55	55	67	74	75	80	81	77	73	85	71
CMT/4-250/100 - 1,1	56	69	75	76	81	82	78	75	87	72
CMT/4-280/115 - 2,2	59	72	78	79	84	85	81	78	90	75
CMT/4-315/130 - 2,2	56	69	75	76	81	82	78	75	87	72
CMT/4-315/130 - 3	59	72	78	79	84	85	81	78	90	75
CMT/4-315/130 - 4	62	75	81	82	87	88	84	81	93	78
CMT/4-355/145 - 3	59	72	78	79	84	85	81	78	90	75
CMT/4-355/145 - 4	62	75	81	82	87	88	84	81	93	78
CMT/4-355/145 - 5,5	65	78	84	85	90	91	87	84	94	81
CMT/4-400/165 - 4	61	74	80	81	86	87	83	80	93	77
CMT/4-400/165 - 5,5	64	77	83	84	89	90	86	83	95	80
CMT/4-400/165 - 7,5	67	80	86	87	92	93	89	86	98	83
CMT/4-450/185 - 5,5	67	80	86	87	92	93	89	86	98	83
CMT/4-450/185 - 7,5	70	83	89	90	95	96	92	89	101	86
CMT/4-500/205 - 7,5	67	80	86	87	92	93	89	86	98	83
CMT/4-500/205 - 9,2	69	82	88	89	94	95	91	88	100	85
CMT/4-500/205 - 11	71	84	90	91	96	97	93	90	102	87
CMT/4-500/205 - 15	73	86	92	93	98	99	95	92	104	89
6 POLE									6 POLE	
CMT/6-315/130 - 1,1	54	67	70	78	78	79	74	70	84	70
CMT/6-355/145 - 1,5	56	69	72	80	80	81	76	72	86	72
CMT/6-400/165 - 2,2	58	70	73	81	81	82	78	74	87	73
CMT/6-450/185 - 2,2	60	73	76	84	84	85	80	76	90	76

Dimensions (mm)

Series 1

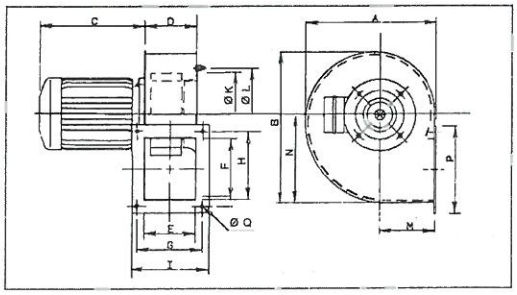

Model	A	B	C1 2*	C1 4*	D	E	F	G	H	I	K	L	M	N	P	Q
120/50	180	203	153	153	74,5	72	85	92	105	106	113	132	81	116	118	5,5
140/50	222	249	177	153	82,5	80	105	105	128	123	144	152	100	147	147	7
160/60	254	293	207	153	102,5	100	120	128	148	153	166	180	109	171	172	7
180/75	302	347	232	177	117,5	115	140	145	170	168	187,5	210	128	203	192	9
200/60	300	347	207	153	107,5	105	100	135	128	158	209	230	128	203	152	9
200/80	321	375	232	207	132,5	130	160	160	188	183	209	230	138	222	212	9

* Number of poles

Series 2

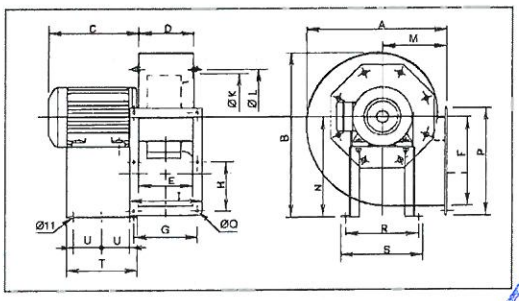

Model	A	B	C1 2*	C1 4*	D	E	F	G	H	I	K	L	M	N	P	Q	R	S	T	U
225/90	386	452	248	235	144	140	216	180	128	203	234	256	181	280	279	10	220	250	200	50
250/100	425	501	300	248	169	165	250	205	145	228	261	282	197	310	313	10	228	260	225	74
280/115	471	553	320	300	184	184	300	220	170	243	293	320	216	340	363	10	245	275	240	95
315/130	524	628	–	320	206	200	320	240	180	263	326	354	238	390	383	11	322	352	230	140

* Number of poles

Series 3

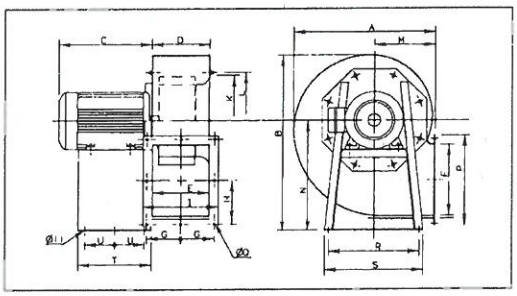

Model	A	B	C max. /4*	C max. /6*	D	E	F	G	H	I	K	L	M	N	P	Q	R	S	T	U
355/145	572	713	390	320	231	228	280	133	159	291	367	394	250	445	343	11	420	450	333	136,5
400/165	632	796	425	340	254	250	320	150	185	334	413	438	270	495	404	11	402	438	327	133,5
450/185	709	898	425	340	288	284	360	164	202	368	463	485	302	560	444	11	502	538	340	140
500/205	795	984	550	445	319	315	450	182,5	250	409	513	535	345	610	544	11	613	653	435	187,5

Performance curves

- Q = Air volume in, m^3/hr and m^3/s.
- Ps = Static pressure in mmWG and Pa.
- Dry air at 20°C and 760 mmHg.
- Performance data in accordance with ISO 5801 and AMCA 210-99 Standards.

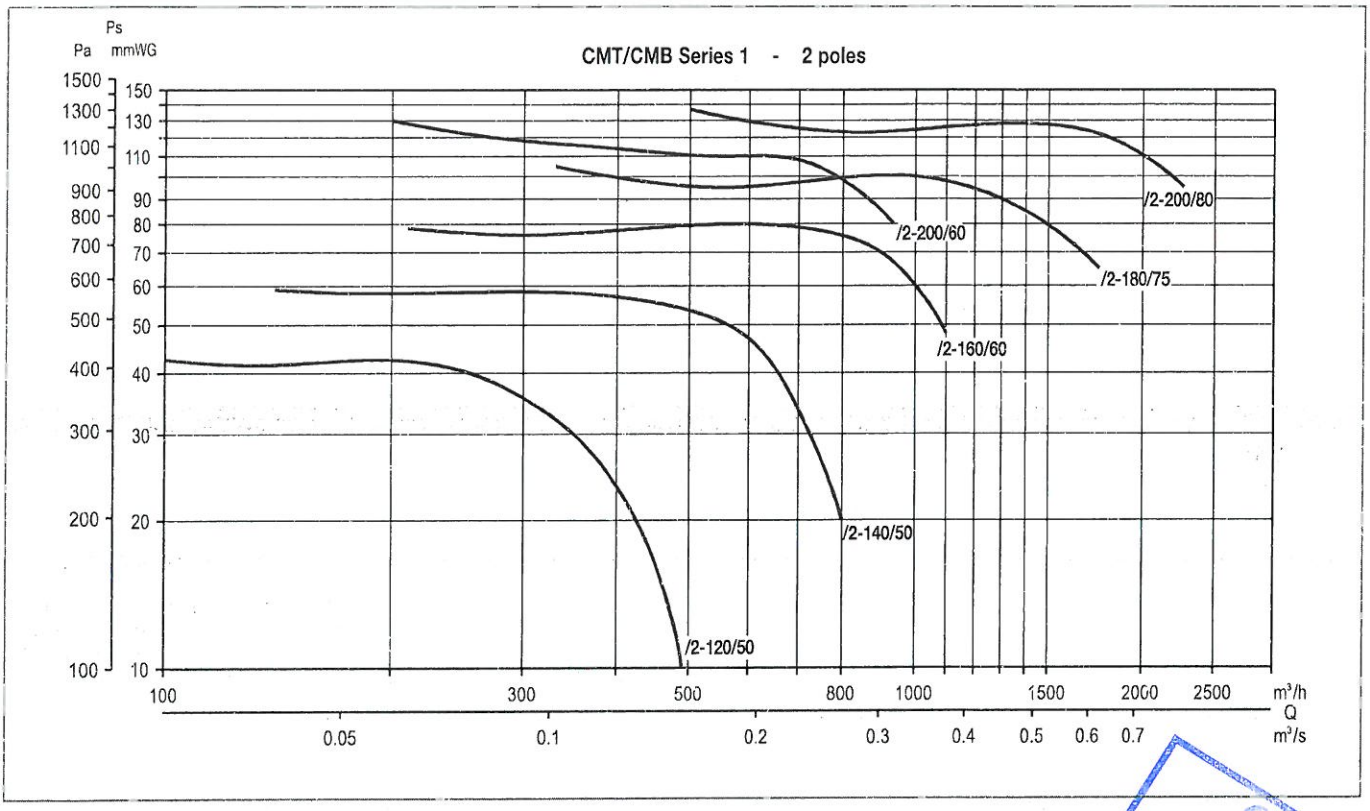

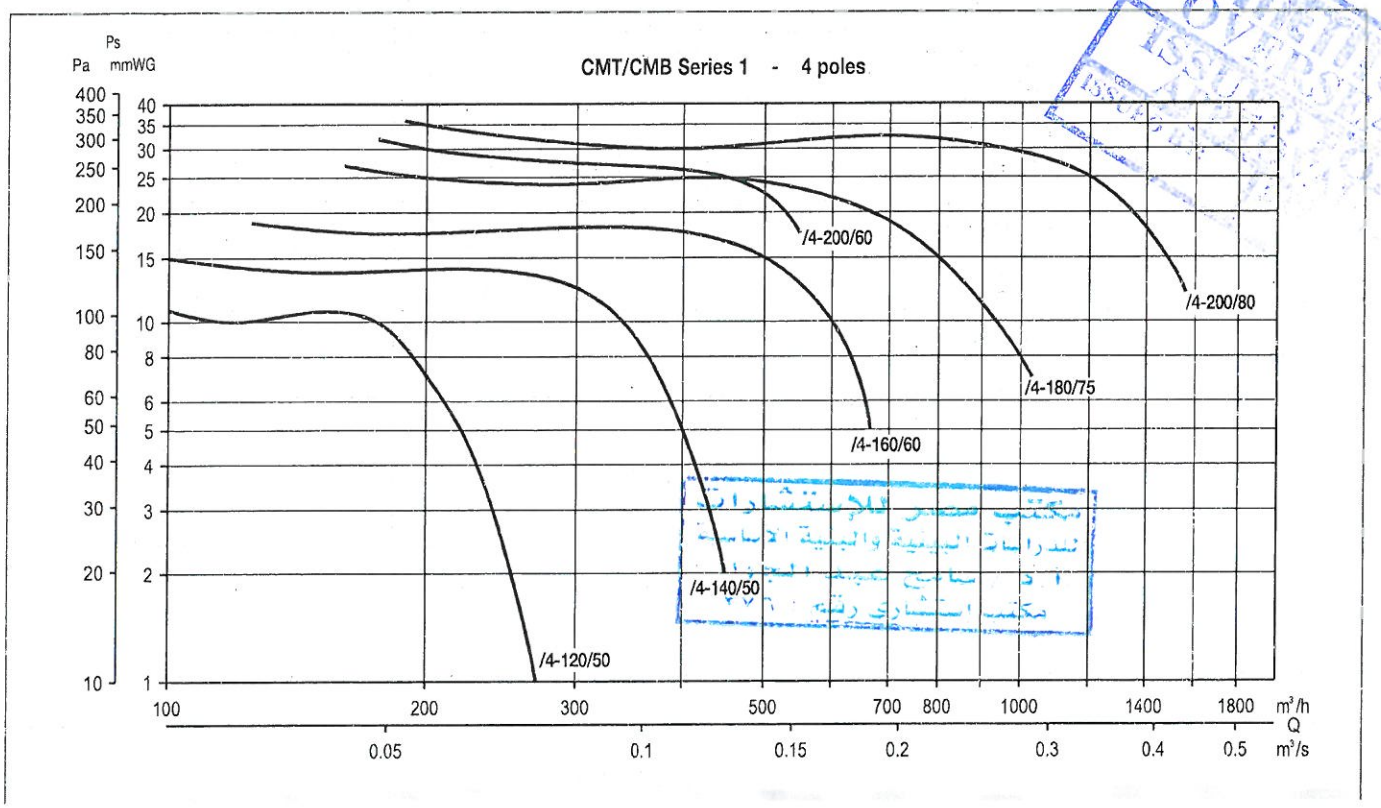

Performance curves

- Q = Air volume in, m^3/hr and m^3/s.
- Ps = Static pressure in mmWG and Pa.
- Dry air at 20°C and 760 mmHg.
- Performance data in accordance with ISO 5801 and AMCA 210-99 Standards.

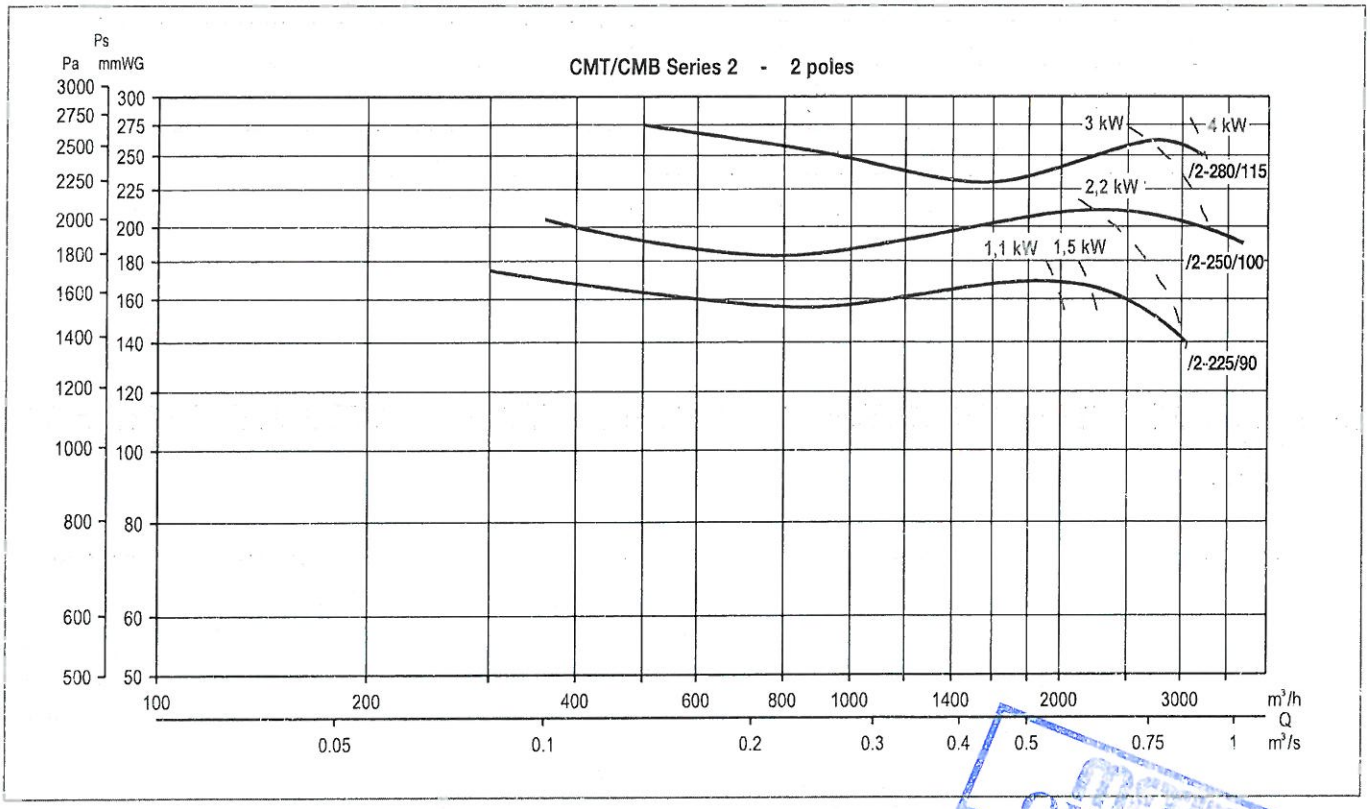

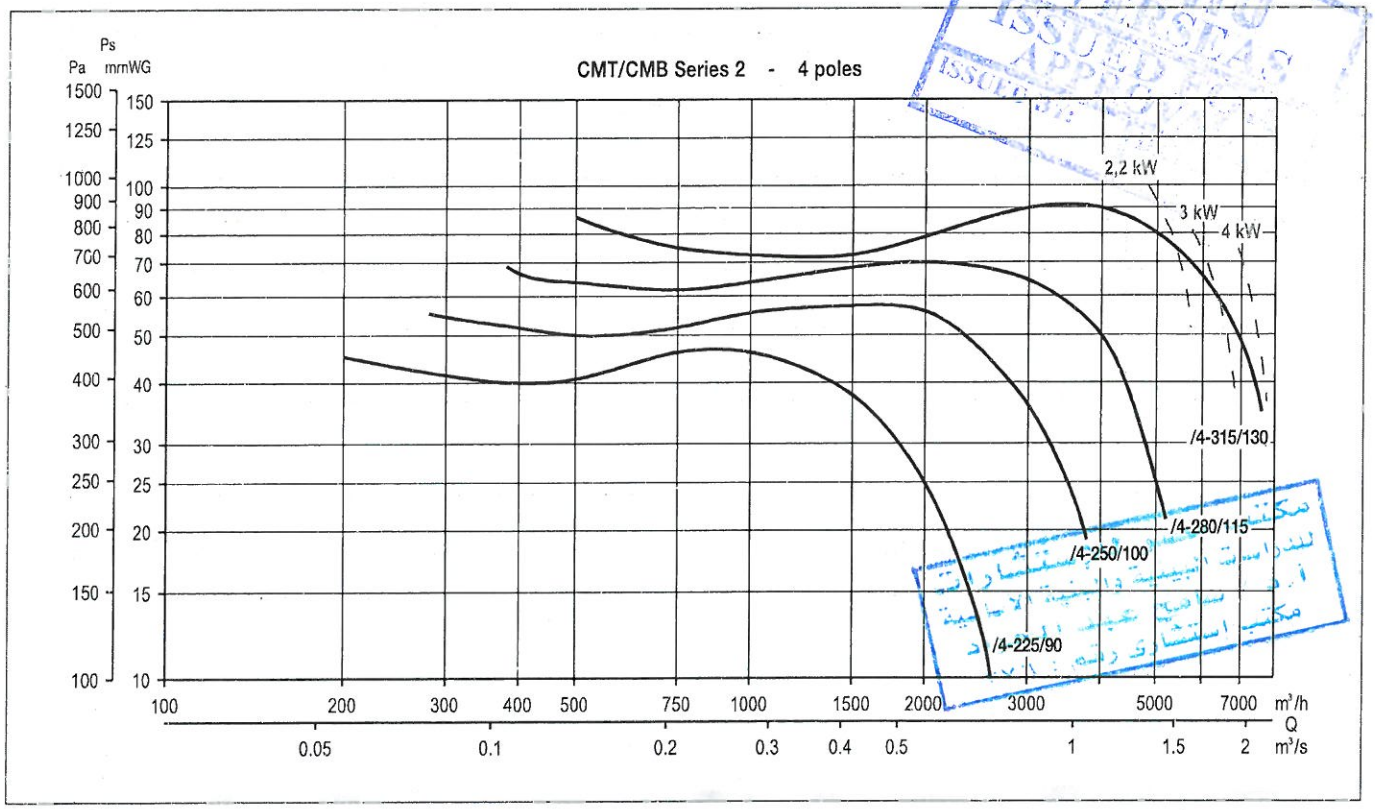

Performance curves

- Q = Air volume in, m^3/hr and m^3/s.
- Ps = Static pressure in mmWG and Pa.
- Dry air at 20°C and 760 mmHg.
- Performance data in accordance with ISO 5801 and AMCA 210-99 Standards.

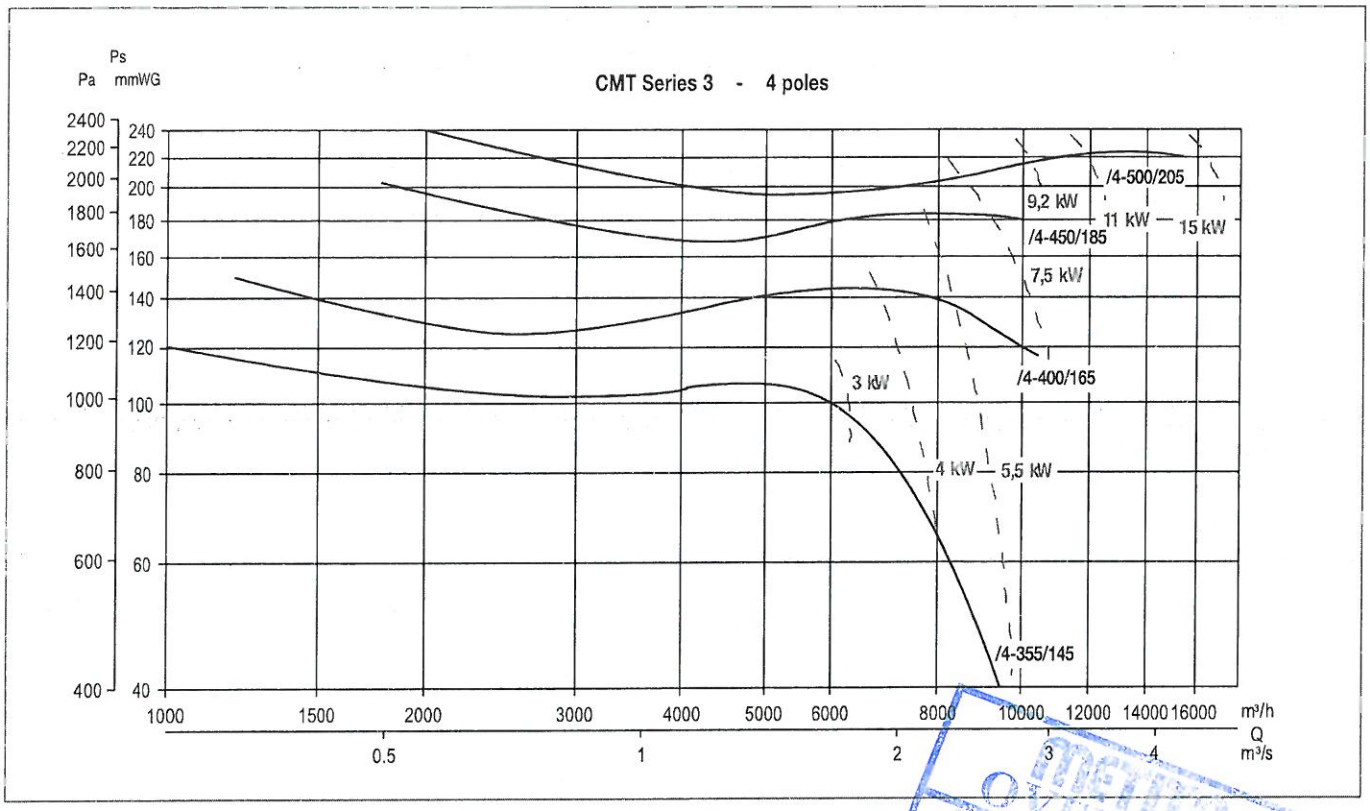

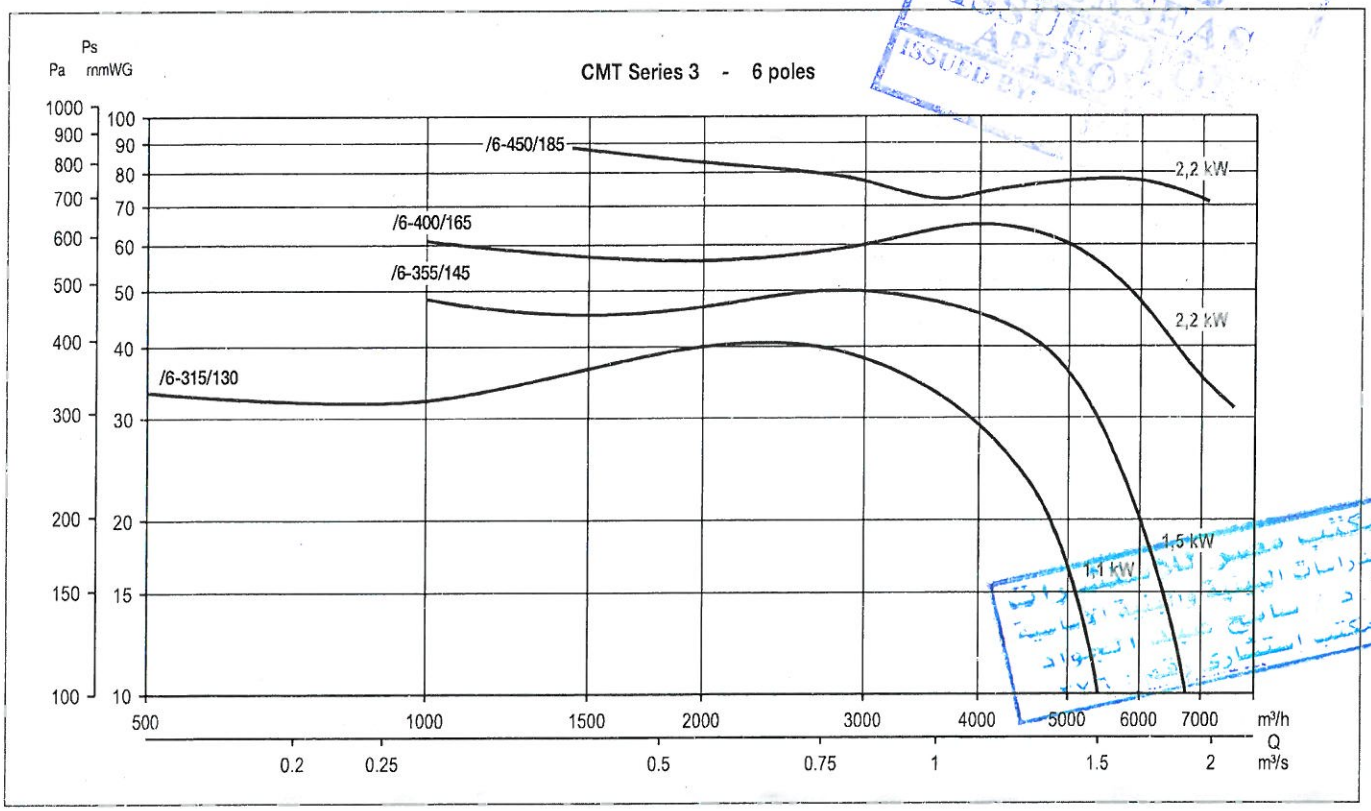

Mounting accessories

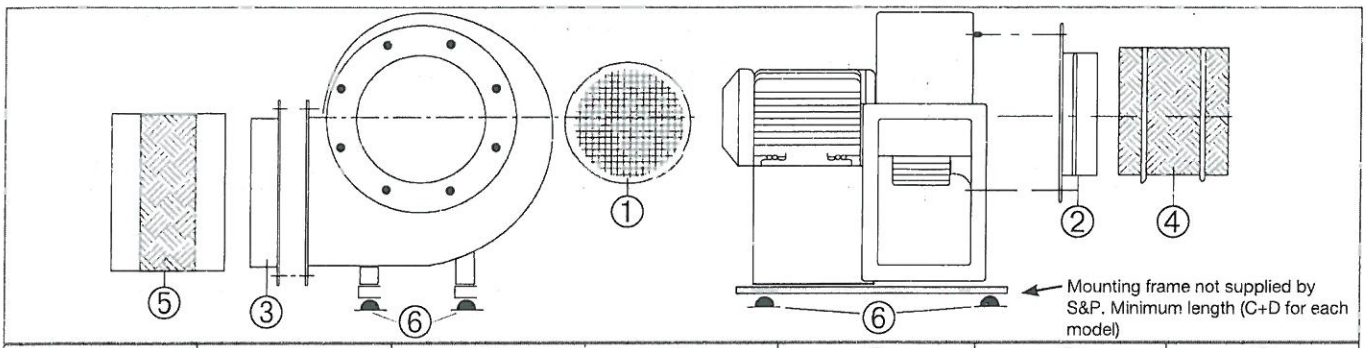

Model CMB/CMT	1 Inlet guard	2 Inlet flange	3 Discharge flange	4 Circular flexible connector	5 Rectangular flexible connector	6 Anti-vibration mounts (1 KSE = 4 mounts)
120/50	KRJ-120	KBA-120	KBD-120	KAA-120	KAD-120	–
140/50	KRJ-140	KBA-140	KBD-140	KAA-140	KAD-140	–
160/60	KRJ-160	KBA-160	KBD-160	KAA-160	KAD-160	–
180/75	KRJ-180	KBA-180	KBD-180	KAA-180	KAD-180	–
200/60	KRJ-200	KBA-200	KBD-200/60	KAA-200	KAD-200/60	–
200/80	KRJ-200	KBA-200	KBD-200/80	KAA-200	KAD-200/80	–
225/90	KRJ-225	KBA-225	KBD-225	KAA-225	KAD-225	Motor power < = 3 kW: **KSE-45**
250/100	KRJ-250	KBA-250	KBD-250	KAA-250	KAD-250	
280/115	KRJ-280	KBA-280	KBD-280	KAA-280	KAD-280	
315/130	KRJ-315	KBA-315	KBD-315	KAA-315	KAD-315	
355/145	KRJ-355	KBA-355	KBD-355	KAA-355	KAD-355	Motor power > = 4 kW: **KSE-70**
400/165	KRJ-400	KBA-400	KBD-400	KAA-400	KAD-400	
450/185	KRJ-450	KBA-450	KBD-450	KAA-450	KAD-450	
500/205	KRJ-500	KBA-500	KBD-500	KAA-500	KAD-500	

*According to motor power


KRJ
Inlet guard


KBA
Inlet flange


KBD
Discharge flange


KAA
Circular flexible connector


KAD
Rectangular flexible connector


KSE
Anti-vibration mounts

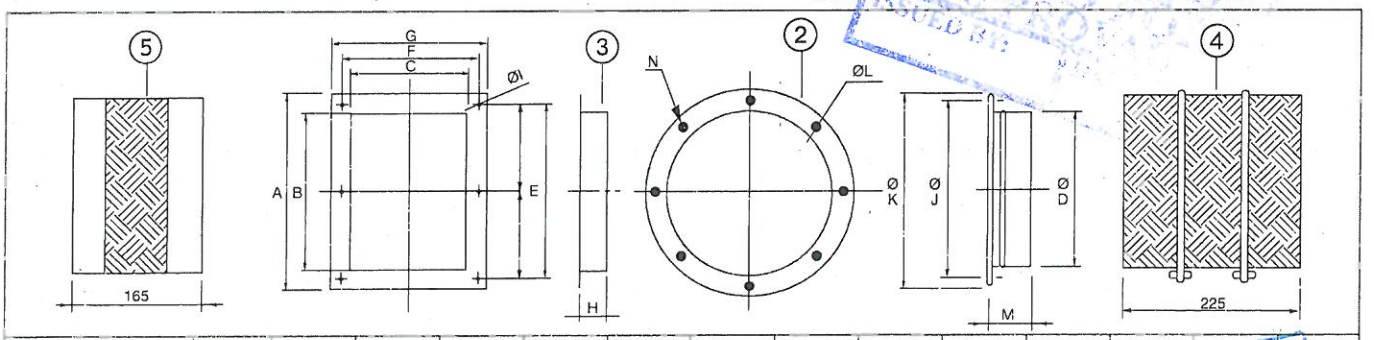

Accessory model	A	B	C	ØD	E	F	G	H	Ø I	ØJ	Ø K	Ø L	M	N
120/50	118	87	75	112	105	92	106	40	5,5	132	150	5	65	4
140/50	147	107	83	125	128	105	123	40	7	152	170	5	65	4
160/60	172	122	103	160	148	128	153	40	7	180	205	7	65	4
180/75	192	142	118,5	180	170	145	168	40	9	210	244	7	65	4
200/60	158	108,5	102	200	135	128	152	45	9	230	255	7	65	4
200/80	212	162	134	200	188	160	183	45	9	230	255	7	65	4
225/90	279	219	143	224	256	180	203	45	10	256	280	9	65	8
250/100	313	253	168	250	290	205	228	45	10	282	306	9	65	8
280/115	363	303	183	280	340	220	243	50	10	320	348	9	65	8
315/130	383	323	203	315	360	240	263	50	11	354	382	9	65	8
355/145	343	283	231	355	318	266	291	50	11	394	422	9	65	8
400/165	404	324	254	400	370	300	334	55	11	438	464	9	65	8
450/185	444	364	288	450	404	328	368	55	11	485	515	9	65	8

Mounting accessories

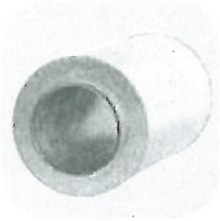

KMTA
Sound attenuators for mounting at the CMT fan inlet.

KMTI
Sound attenuators for mounting at the CMT fan outlet.

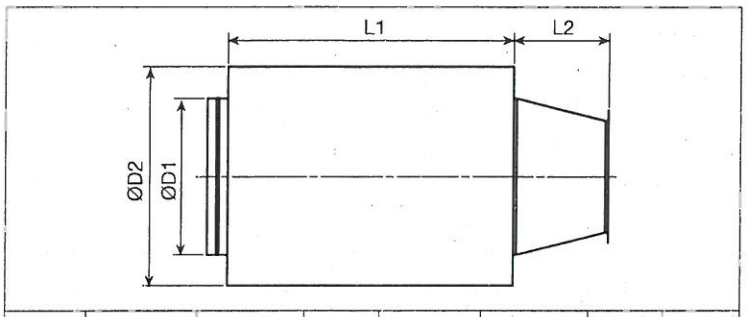

Model CMT	Model KMTA	Model KMTI	L1	L2 (KMTA)	L2 (KMTI)	D1	D2
225	KMTA-225	KMTI-225	600	250	300	315	515
250	KMTA-250	KMTI-250	900	250	300	355	555
280	KMTA-280	KMTI-280	900	300	300	400	600
315	KMTA-315	KMTI-315	900	300	300	450	650
355	KMTA-355	KMTI-355	900	300	300	500	700
400	KMTA-400	KMTI-400	900	300	300	500	700
450	KMTA-450	KMTI-450	900	300	450	560	760
500	KMTA-500	KMTI-500	900	300	450	630	830

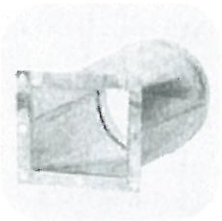

KMBI
Rectangular/circular connection flange for mounting at the CMT fan outlet.

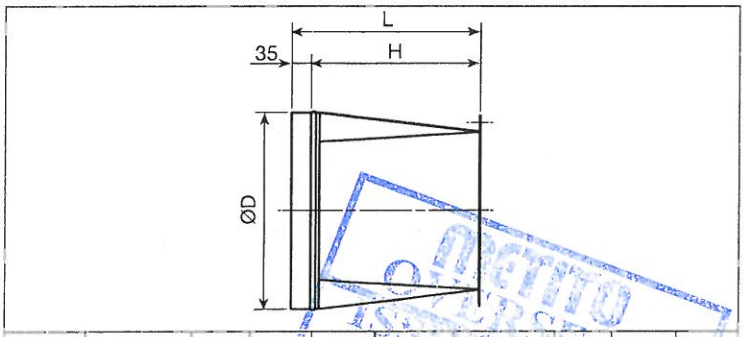

Model CMT	Model KMBI	L	H	D	Model CMT	Model KMBI	L	H	D
120	KMBI-120	235	200	125	250	KMBI-250	335	300	250
140	KMBI-140	235	200	140	280	KMBI-280	335	300	280
160	KMBI-160	235	200	160	315	KMBI-315	335	300	315
180	KMBI-180	235	200	180	355	KMBI-355	335	300	355
200/60	KMBI-200	335	300	200	400	KMBI-400	335	300	400
200/80	KMBI-201	335	300	200	450	KMBI-450	485	450	450
225	KMBI-225	335	300	225	500	KMBI-500	485	450	500

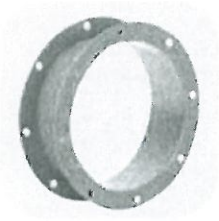

KMBD
Double connection flange for mounting at the CMT fan inlet.

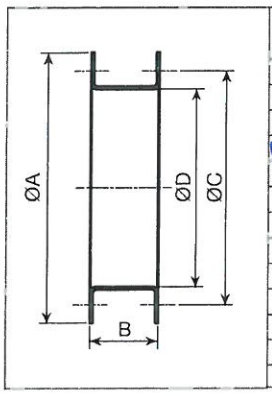

Model CMT	Model KMBD	A	B	C	D
120	KMBD-120	150	60	132	112
140	KMBD-140	170	80	152	125
160	KMBD-160	205	80	180	160
180	KMBD-180	244	80	210	180
200	KMBD-200	255	80	230	200
225	KMBD-225	280	80	256	224
250	KMBD-250	306	80	282	250
280	KMBD-280	346	100	320	280
315	KMBD-315	382	100	354	315
355	KMBD-355	422	100	394	366
400	KMBD-400	464	100	438	400
450	KMBD-450	515	100	485	450
500	KMBD-500	565	100	535	500

Electrical accessories

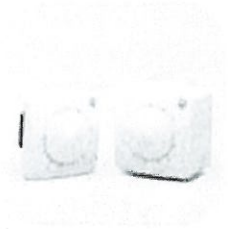

REB
Electronic single phase speed controllers

RMT
Three phase auto transformer speed controllers

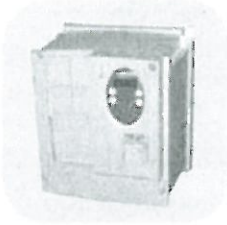

VFTM TRI IP54
Adjustable frequency drive for three phase motors from 0,37 to 15 kW 400 V

4.19 Sample Pumps

BG Series

Close-coupled self-priming centrifugal pumps with built-in ejector system, designed to remain primed even in the presence of water-dissolved gases. The extensive use of pressed stainless steel ensures a high-performance, durable and lightweight pump.

Available in the "Garden" version with handle and terminal box with builtin switch.

Applications

Water distribution

Pressure boosting

Irrigation

Washing

Rain water collection

Swimming pools

Fountains

Specifications

Delivery: up to 4.2 m^3/h
Head: up to 53 m
Power supply: three-phase and single-phase 50 and 60 Hz
Power: 0.37 kW to 1.1 kW
Maximum operating pressure: 8 bar
Maximum total lift: 8 m
Maximum ambient temperature: 40°C
Temperature of pumped liquid: -10°C to +40°C
Insulation class: F
Protection: IP55

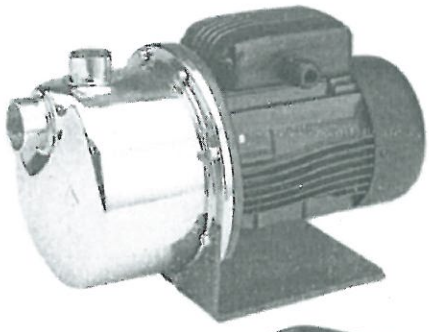

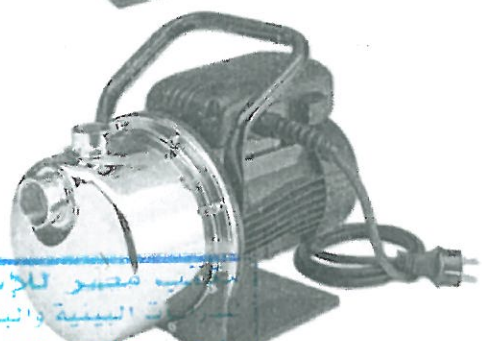

Materials

Pump body: Stainless steel
Impeller: Stainless steel
Diffuser: Technopolymer
Ejector: Technopolymer
Seal housing: Stainless steel
Mechanical seal: Ceramic/Carbon/EPDM
Fill and drain plugs: Nickel-plated brass
Elastomers: EPDM

For a complete list of technical information, consult www.lowara.com

BG SERIES
Operating characteristics at 50 Hz

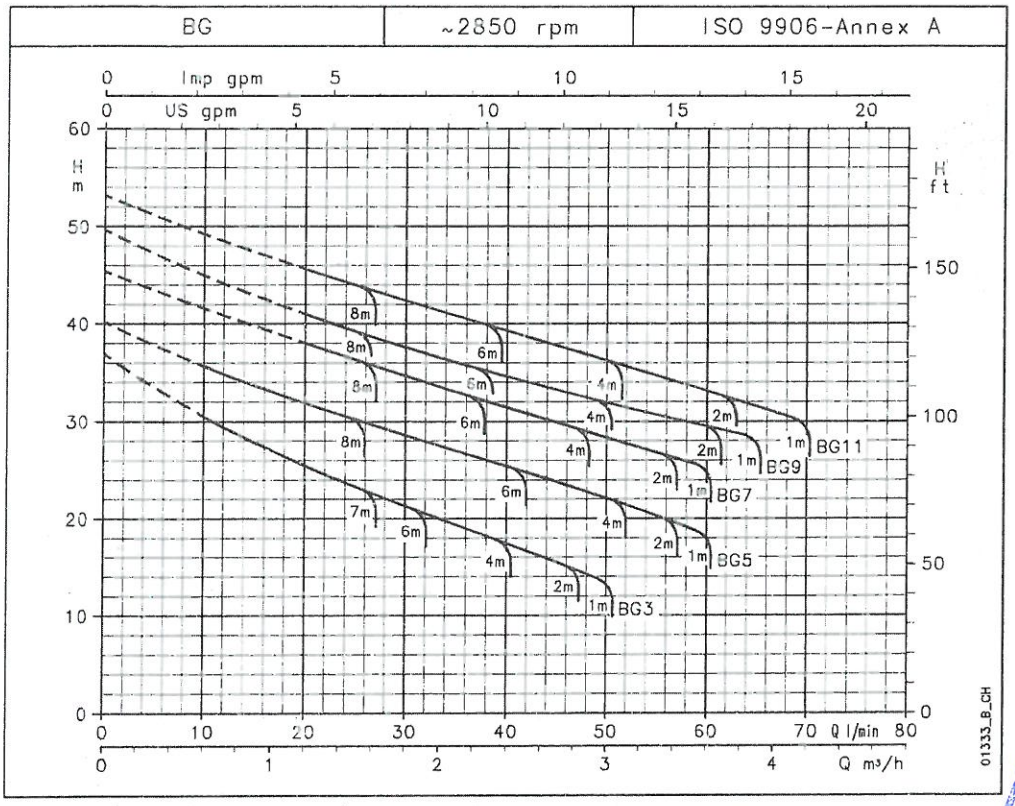

Hydraulic performance table

PUMP TYPE	RATED POWER		Q = DELIVERY								
			l/min 0	10	20	30	40	50	60	65	70
			m³/h 0	0,6	1,2	1,8	2,4	3	3,6	3,9	4,2
	kW	HP	H = TOTAL HEAD IN COLUMN OF WATER (METRES)								
BG(M)3	0,37	0,5	36,9	30,6	25,6	21,5	17,7	13,8			
BG(M)5	0,55	0,75	40,2	35,7	32,0	28,3	25,7	22,4	18,8		
BG(M)7	0,75	1	45,4		38,1	34,9	31,7	28,6	25,6		
BG(M)9	0,9	1,2	49,6		41,1	37,7	34,8	32,2	29,8	28,6	
BG(M)11	1,1	1,5	53,2		45,8	42,5	39,5	36,5	33,5	31,9	30,3

Maximum delivery depends on geodetic suction lift with clean 25 mm pipe and 1¼" foot valve. bg-2d50_a_th

These performances are valid for liquids with density ρ = 1 kg/dm³ and kinematic viscosity ν = 1 mm²/s.

Electrical data

PUMP TYPE 1 ~	MOTOR TYPE	INPUT POWER* kW	INPUT CURRENT* 220-240 V A	CAPACITOR µF / 450 V	PUMP TYPE 3 ~	MOTOR TYPE	INPUT POWER* kW	INPUT CURRENT* 220-240 V A	INPUT CURRENT* 380-415 V A
BGM3	SM63BG/1045	0,67	2,96	14	BG3	SM63BG/304	0,68	2,56	1,48
BGM5	SM71BG/1055	0,91	4,33	16	BG5	SM71BG/305	0,81	2,74	1,58
BGM7	SM71BG/1075	1,11	5,00	20	BG7	SM80BG/307HE	1,07	3,32	1,92
BGM9	SM71BG/1095	1,24	5,54	25	BG9	SM80BG/311HE	1,15	3,65	2,11
BGM11	SM80BG/1115	1,43	6,47	30	BG11	SM80BG/311HE	1,34	4,12	2,38

*Maximum value in specified range. bg-2d50_en_h_ie

BG SERIES
Dimensions and weights

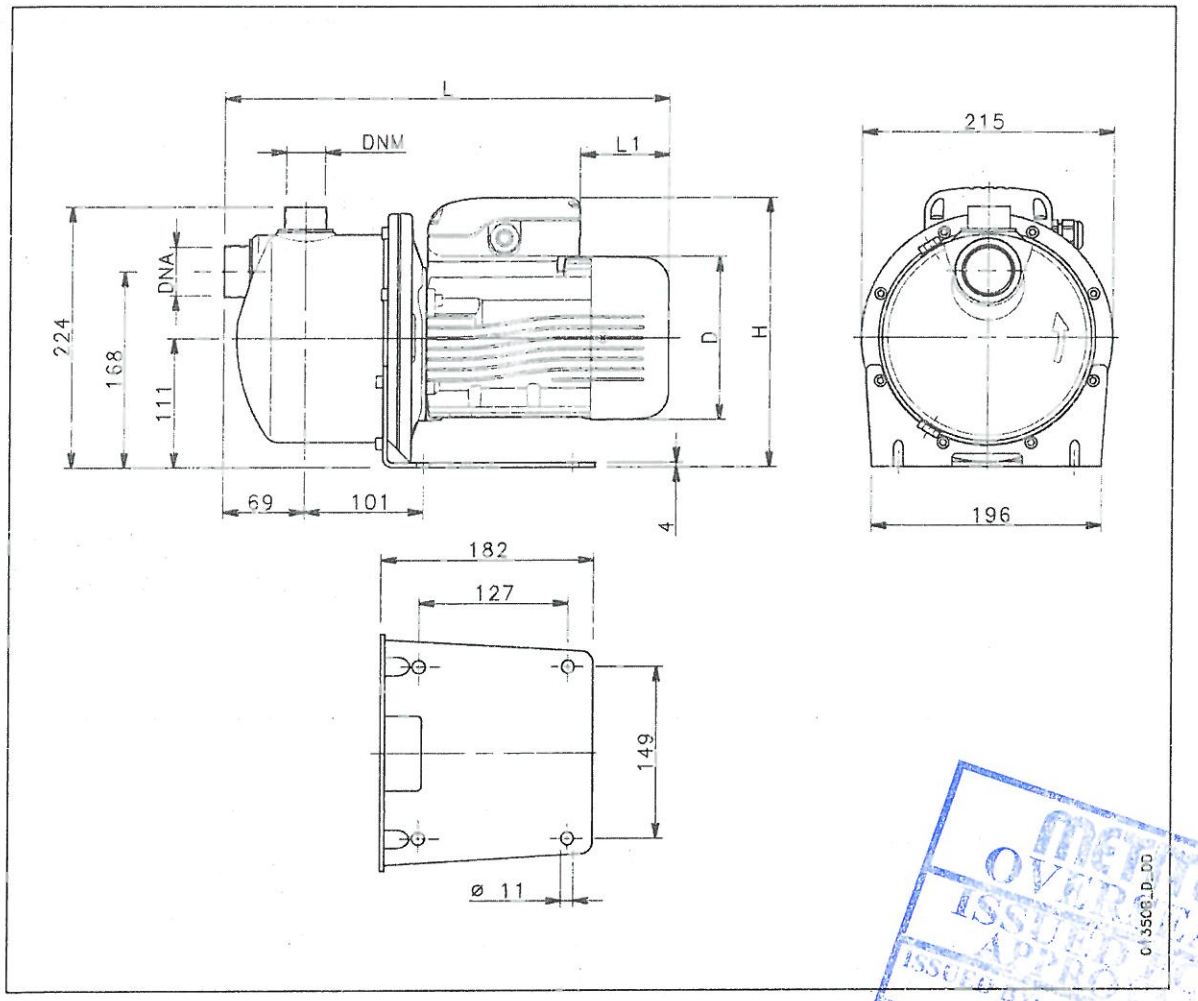

PUMP TYPE	DIMENSIONS (mm)				DNA	DNM	WEIGHT
	D	L	L1	H			kg
BGM3	120	366	62	222	Rp 1¼	Rp 1	10
BGM5	140	380	76	232	Rp 1¼	Rp 1	12
BGM7	140	380	76	232	Rp 1¼	Rp 1	13
BGM9	140	380	31	241	Rp 1¼	Rp 1	13
BGM11	156	425	69	248	Rp 1¼	Rp 1	15
BG3	120	366	62	222	Rp 1¼	Rp 1	10
BG5	140	380	76	232	Rp 1¼	Rp 1	12
BG7	155	425	114	240	Rp 1¼	Rp 1	17
BG9	155	425	114	240	Rp 1¼	Rp 1	19
BG11	155	425	114	240	Rp 1¼	Rp 1	19

4.20 Caustic Soda Mixer

Caustic Soda Mixer gearbox motor
Technical Data Sheet
Abu Owiekal water plant

Brand : SEW
Model : RF27 DRS90M4/C
Origin :France

Speed 50Hz [r/min]	: 1395 / 212
Total ratio [I]	: 6,59 / infinite
Ma max [Nm]	: 106
Output torque 50Hz [Nm]	: 68

Service factor SEW-FB	: 1,55
Mounting position	: M4
Term.box.pos.[°] / cable entry	: 0 (R) / normal
Lubricant / -volume [l]	: CLP 220 Miner. Oil / 0,70
Corrosion protection	: Yes
Surface protection	: OS2 to technical data sheet 01802_94
Paint coat	: Top coat RAL7031 (blue grey)
Output shaft end	: 25x50mm lg.
Flange	: 140mm
Documentation no. A	: 21932786
Parts list	: 012520898
Motor power [kW]	: 1.5
Motor frequency [Hz]	: 50
Cyclic duration factor S1-S10	: S1
Voltage range [V]	: 220-242 delta/380-420 star
Rated current [A]	: 5,90 / 3,40
cos phi	: 0,82
Wiring diagram	: R13 / 680010306
Thermal cl.[°C]/Enclosure[IP]	: 155(F) / 55
International efficiency class	: IE1
Efficiency	:
at 50/75/100% Pn [%]	: 82,0 / 82,0 / 79,6
CE mark	: No
Fan guard element	: C = protection canopy
Terminal box	: Terminal box lower part made of aluminum
	: with tapped hole
	: 1xM25, 1xM16
Documentation no. A	: 22760253
Spare parts list	: Please contact your Sales clerk
	: concerning the SWPL (spare and wearing
	: parts list)
Nameplate	: English
Nameplate position	: 270°
Opera.instr. A lang./quantity	: English
Commodity code	: 85015220
net weight approx. kg	: 23.00 each

The future is straightforward and safe: Gear units and motors in a modular system

Gearmotors

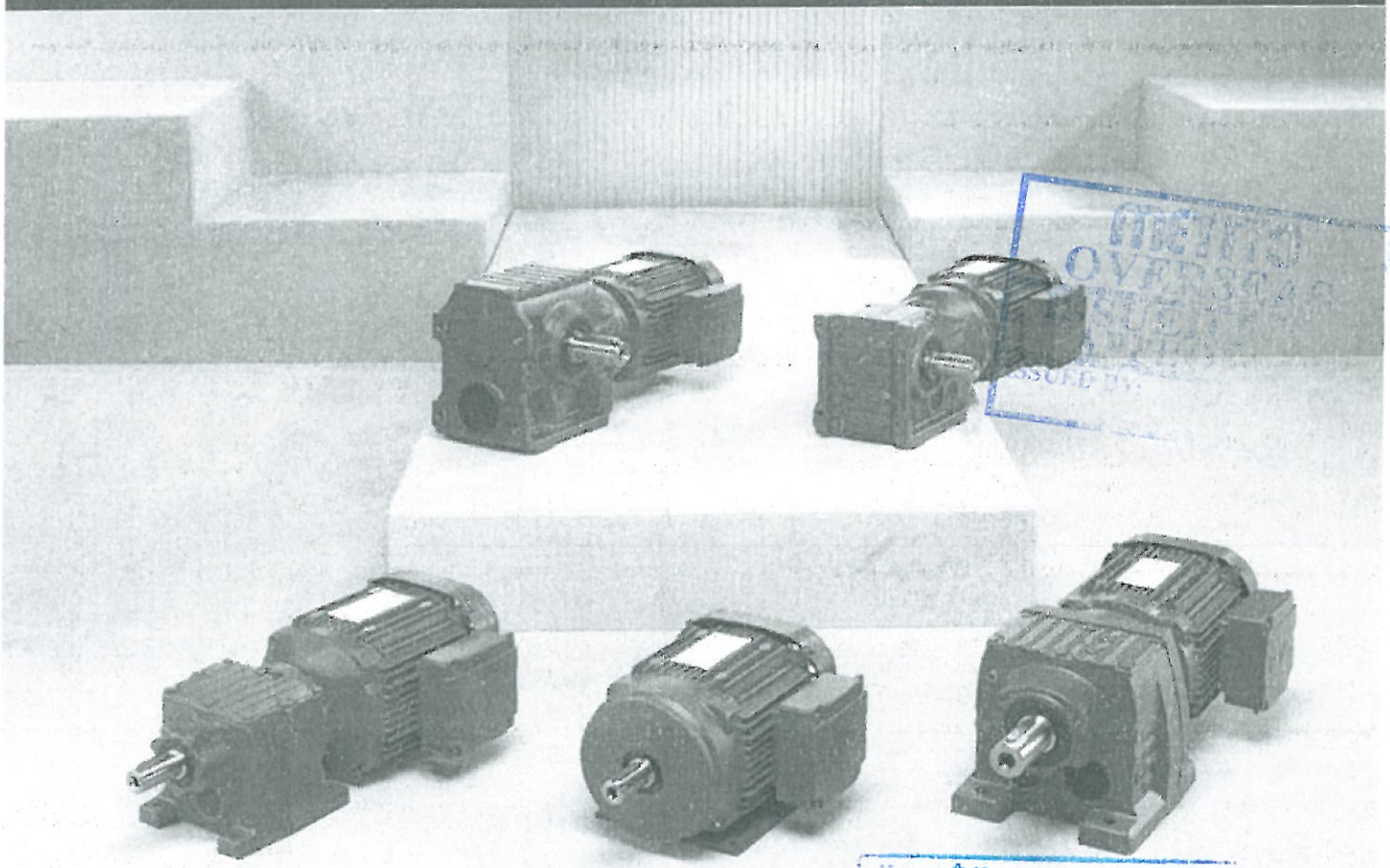

Another milestone at SEW-EURODRIVE: Safe worldwide standards for each drive solution

This brochure on our extremely versatile modular for gearmotors documents once more the values we live by in our company. It shows that you can rely on SEW-EURODRIVE in every respect because the modular system fulfills our brand promise in many ways. It includes technically unique innovations, opens up even more possibilities for selecting the right drive solution, simplifies the configuration of components and provides investment security worldwide.

The redevelopment of the tried and tested DT/DV motor series has turned all gearmotor variants of SEW-EURODRIVE into future-proof innovation carriers of the highest quality. The new AC motor modular system with the DR.. series encompasses the entire range of efficiency ratings, including energy-efficient motors. This is a logical consequence of the developments in environmental policies worldwide.

In the future, gearmotors from SEW-EURODRIVE will continue to fulfill all standards worldwide. What's more, by integrating them into a standardized modular system, SEW-EURODRIVE has become the first manufacturer to offer energy-efficient motors along with conventional AC motors within one series, including three brake variants for each motor. This ensures a much better price for the energy-efficient motor. Last but not least, the DR.. motor is the best SEW-EURODRIVE motor that has ever been launched.

Driving the world – with innovative drive solutions for all industries and for every application. Products and systems from SEW-EURODRIVE are used all over the world. Be it in the automotive, building materials, food and beverage or metal-processing industry – the decision to use drive technology "made by SEW-EURODRIVE" stands for reliability for both functionality and investment.

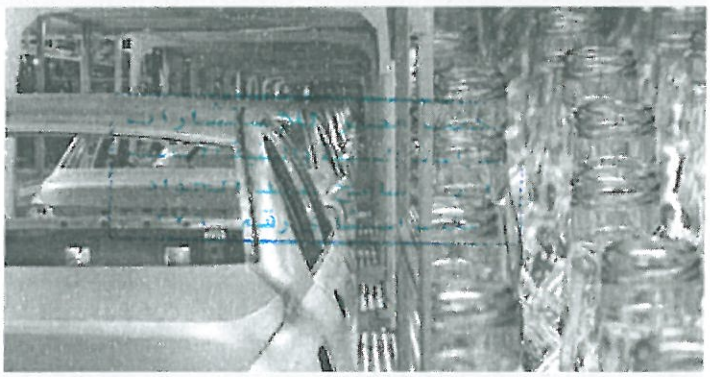

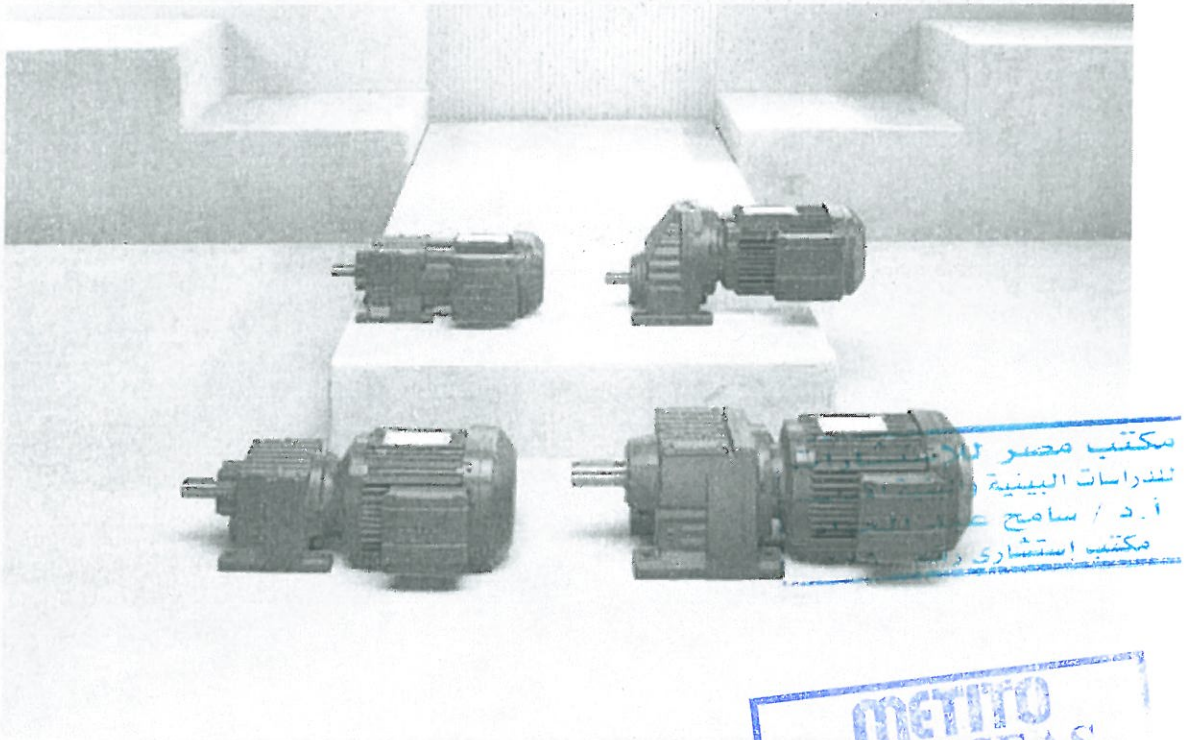

At the same time, the new motor series offers the same advantages that have made the DT/DV series successful in millions of drive solutions worldwide. These include, above all, performance, compact design, versatility, reliability and long service life. Together with many other benefits, also in combination with our drive electronics components, they have turned our gearmotors into what they are today:

State-of-the-art drive technology.

This brochure gives you a complete overview of all possible gearmotor variants. The content is divided into gear units, motors and accessories/options. At the end, clearly structured tables give an overview of matching components for your individual drive solution.

The area of application for our gear units: the world

We do not exaggerate when we proudly say: There is no industry and no drive application in the world for which our gear units in combination with the required motors would not offer excellent performance. Areas of application include automotive engineering, the food and beverage industry, logistics (airport logistics, intralogistics and port logistics), the wood processing, construction and construction materials industries, and countless special applications, for example in theaters.

Depending on power requirements, space and technical specifications, SEW-EURODRIVE offers the full range of gear units in a modular system: Helical, parallel-shaft helical, helical-bevel, helical-worm, and SPIROPLAN® right-angle gear units. Input covers, motor adapters and various clamping joints in line with the gear unit family are also available from SEW-EURODRIVE.

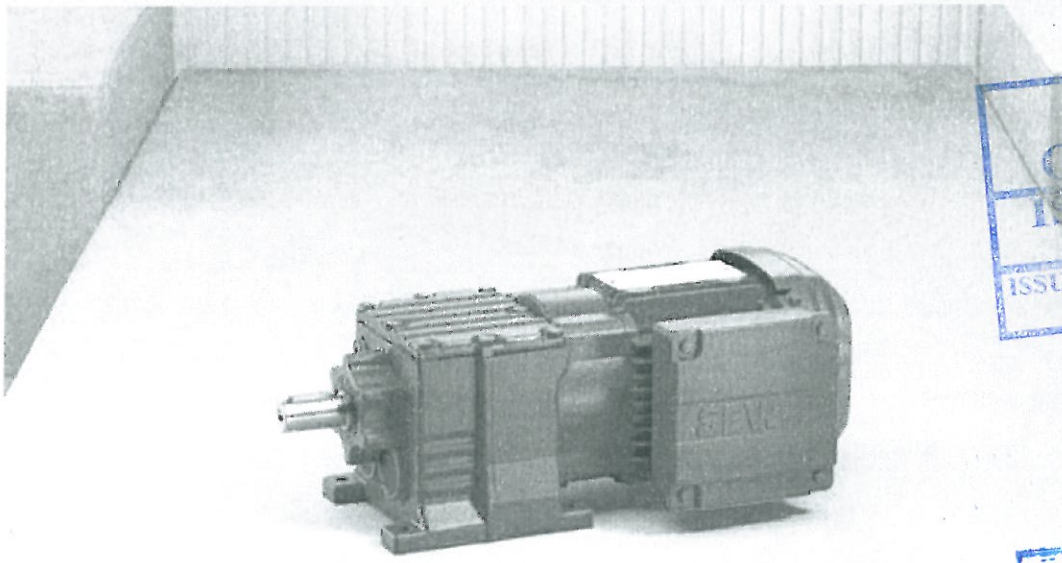

Helical gear units (R): always the optimum space/performance ratio

Six single-stage and fourteen two- and three-stage sizes covering a power range from 50 to 18,000 Nm: Our helical gear units always offer an optimum ratio between performance and space requirements. The fine graduation and variety of torque ratings and gear ratios is peerless. They also satisfy demands for high output speeds or low weight due to the many available sizes.

The result: A helical gear unit is always suitable.

Helical gear units (R)

Type	Maximum output torque [Nm]	Gear unit reduction ratio [i]	Gear unit reduction ratio Multi-stage gear unit [i]
RX series (single-stage) Sizes 57 / 67 / 77 / 87 / 97 / 107	69 ... 830	1.30 ... 8.65	–
R series (two- and three-stages) Sizes 07 / 17 / 27 / 37 / 47 / 57 / 67 / 77 / 87 / 97 / 107 / 137 / 147 / 167	50 ... 18,000 (also with reduced backlash)	3.21 ... 289.74	90 ... 27,001
RM series (two- and three-stages) Sizes 57 / 67 / 77 / 87 / 97 / 107 / 137 / 147 / 167	450 ... 18,000	4.29 ... 289.74	134 ... 27,001

The gear units of the R series are available in the following designs:
- Single- or multi-stage
- Foot- or flange-mounted
- Foot- and flange-mounted
- Flange-mounted with extended output bearing hub

Parallel-shaft helical gear units (F): tailor-made for adverse space conditions

The particularly slim-fit parallel-shaft helical gear units are used wherever space is limited. Various mounting positions and designs make for a large range of applications even under adverse conditions. Thanks to its design characteristics and its large torque range from 120 to 18,000 Nm, this standard gear unit is the ideal solution for many materials handling and process engineering applications.

Parallel-shaft helical gear units (F)

Type	Maximum output torque [Nm]	Gear unit reduction ratio [i]	Gear unit reduction ratio Multi-stage gear unit [i]
F series (two- and three-stages) Sizes 27 / 37 / 47 / 57 / 67 / 77 / 87 / 97 / 107 / 127 / 157	120 ... 18,000 (also with reduced backlash)	3.77 ... 281.71	87 ... 31,434

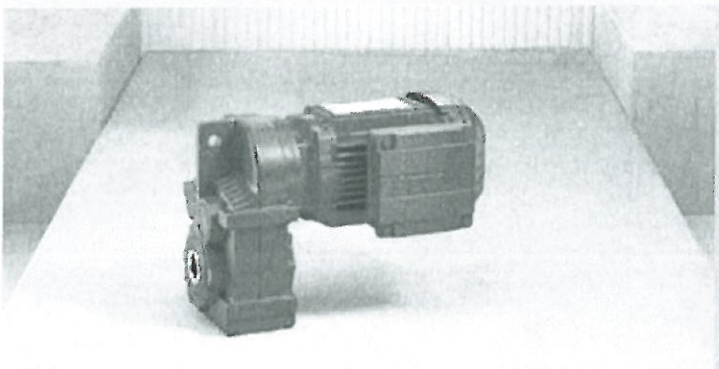

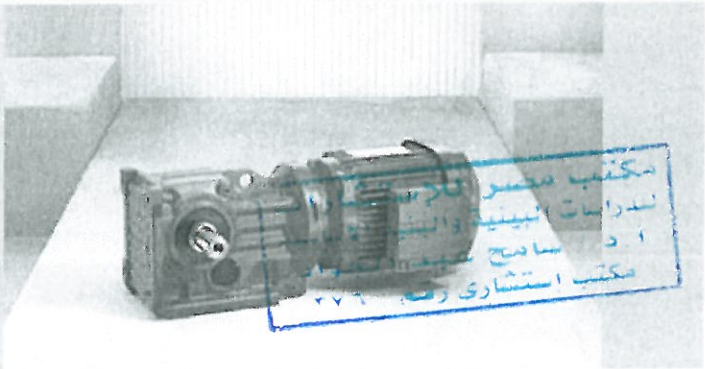

Helical-bevel gear units (K): strong performance and high efficiency in a very compact design

The compact design of all our gear units is most obvious in our helical-bevel gear units. They are sophisticated right-angle gear units for all engineering applications that require space-saving installation. At the same time, they offer a powerful torque range from 200 to 50,000 Nm.

They ensure a remarkably high degree of efficiency of more than 96 per cent in both directions of rotation and for any input speed. A gear unit built to last: The gearing is designed for high endurance and makes for a high-torque, wear-free drive.

Helical-bevel gear units (K)

Type	Maximum output torque [Nm]	Gear unit reduction ratio [i]	Gear unit reduction ratio Multi-stage gear unit [i]
K series Sizes 37 / 47 / 57 / 67 / 77 / 87 / 97 / 107 / 127 / 157 / 167 / 187	200 ... 50,000 (also with reduced backlash)	3.98 ... 197.37	94 ... 32,625

The gear unit series F and K are available in the following designs:
- Foot- or flange-mounted
- In B5 flange-mounted design
- In B14 flange-mounted design
- With solid shaft or hollow shaft
- With hollow shaft with keyed connection, shrink disk, splined hollow shaft or TorqLOC®

Helical-worm gear units (S): cost effectiveness due to simple design

The strength of helical-worm gear units is their simple mechanical structure. Tailored individually to torque and speed requirements, they save installation space and costs when implemented in simple applications. In addition to the large gear ratio in the worm gear stage, our helical-worm gear units also offer a significantly higher level of efficiency than mere worm gear units. Power is transmitted linearly to the drive shaft and the torque shocks are reduced – making for a low noise level. Their torque range runs from 92 to 4,000 Nm.

Helical-worm gear units (S)

Type	Maximum output torque [Nm]	Gear unit reduction ratio [i]	Gear unit reduction ratio Multi-stage gear unit [i]
S series Sizes 37 / 47 / 57 / 67 / 77 / 87 / 97	92 ... 4,000	6.80 ... 288.00	110 ... 33,818

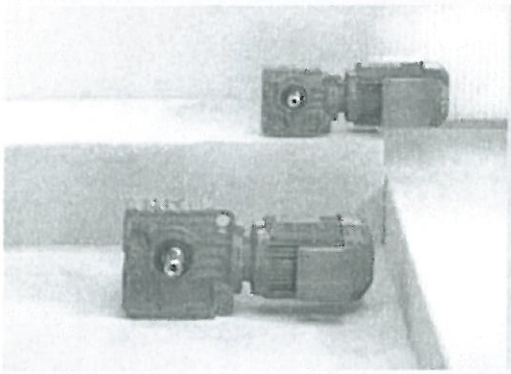

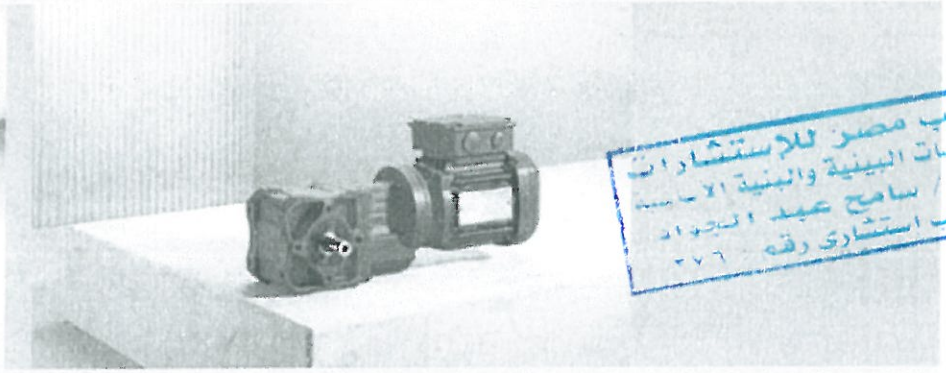

SPIROPLAN® right-angle gear units (W): low-noise lightweights

The SPIROPLAN® right-angle gearmotors do their job reliably and quietly: In the power range from 0.09 to 4.0 kW, the SPIROPLAN® series provides output torques up to 180 Nm – its wear-free gearing ensuring very quiet operation. In combination with the compact design and the lightweight aluminum housing, the noise level is almost perfectly low.

The oil fill is independent of the mounting position, which means SPIROPLAN® gearmotors can be used universally while requiring almost no maintenance. The gear ratio range offers very high output speeds and optimized mechanical efficiency.

SPIROPLAN® right-angle gear units (W)

Type	Maximum output torque [Nm]	Gear unit reduction ratio [i]
W10	25	3.91 ... 75.00
W20	40	6.57 ... 75.00
W30	70	6.57 ... 75.00
W37	110	3.20 ... 69.05
W47	180	3.27 ... 74.98

The gear units of the S and W series are available in the following designs:
- Foot- or flange-mounted
- In B5 flange-mounted design
- In B14 flange-mounted design
- With solid shaft or hollow shaft

Additional variants of the S gear unit series:
- With hollow shaft with keyed connection, shrink disk, splined hollow shaft or TorqLOC®

The new modular motor system: One single series for millions of drive combinations

Configuring gearmotors with AC motors from SEW-EURODRIVE has never been easier: A modular system comprising the motors of the new DR.. series offers all efficiency levels, including energy-efficient motors. In the development of energy-efficient motors, SEW-EURODRIVE became the first company in the world to succeed in using die-cast copper technology in industrial high-volume series production in 2002.

As another new development in the new modular system, SEW-EURODRIVE offers a selection of three different brake sizes for each motor size as well as cost-optimized encoders integrated into the motor.

All motor options and variants of the new DR.. series are available for all efficiency classes. They comply with all worldwide standards and already fulfill the forthcoming IEC standard. They bring a whole range of unique benefits to planners and users.

Overview of benefits:

- Easiest configuration and ordering
- Configuration of all motor variants from just one series
- Even more options, even fewer restrictions
- Compact design saves space and costs
- Future-proof, also as regards environmental protection (standards)
- Reduced prices for energy-efficient motors due to integration
- Reduced prices due to selection of different brake sizes

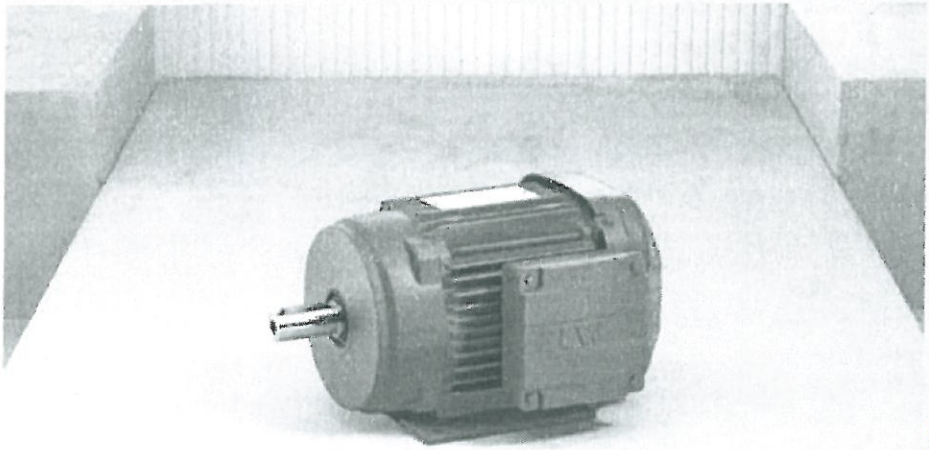

The efficiency classes of the future

The efficiencies of the energy-efficient motors from SEW-EURODRIVE comply with international limit values and standards, often they surpass them. The motors are also available as 2- and 6-pole variants in IE3, IE2 and IE1.

The list of standards includes:
- **Europe** ErP 2009/125/EC
- **Australia/New Zealand** MEPS 2006
- **USA** EISA 2007
- **Canada** CSA C390
- **Brazil** NBR 17094, PROCEL
- **Korea** REELS
- **China** CEL 2011
- and other (Chile, Turkey,...)

Premium Efficiency	IE3
	Europe, Australia, New Zealand, USA and Canada – Extremely high levels of efficiency – DRP.. type AC motors (energy-efficient motors): Motor size 90 and larger: 0.75 ... 160 kW – Copper or aluminum die-cast rotor cage
High Efficiency	IE2
	Europe, Australia, New Zealand, USA, Canada, Brazil, Korea, China ... – High levels of efficiency – DRE.. type AC motors (energy-efficient motors): Motor size 80 and larger: 0.75 ... 200 kW – Copper or aluminum die-cast rotor cage
Standard Efficiency	IE1
	Asia, Africa, Central and South America (without Brazil) – Improved levels of efficiency – DRS.. type AC motors (standard motor): Motor size 71 and larger: 0.37 ... 200 kW – Copper or aluminum die-cast rotor cage

The technical data (4-pole motors) is listed on page 20.

The brake variants in the modular system

Smaller holding torques are required for inverter operation, and less braking work for energy-efficient motors. Today's brakes are often dimensioned too large for this purpose. This is why the new modular motor system from SEW-EURODRIVE makes it possible to choose from up to three brake sizes for each motor size (overview on page 21).

Additional features of the brakes:
- Manual brake release
  - automatic disengaging function
  - lockable
- Function and wear monitoring

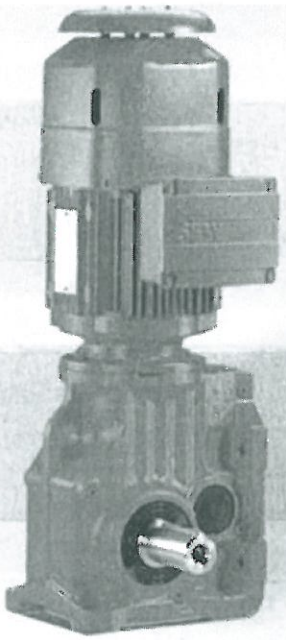

The built-in encoder is fully integrated into the motor

Many applications require only speed and position detection. Previously, elaborate and cost-intensive external encoders were mounted to the motor or initiators were used for complex sensing to fulfill these requirements.

SEW-EURODRIVE offers a unique and cost-optimized solution: the built-in encoder. The encoder is fully integrated into the motor and connected in or at the motor terminal box. Due to its low degree of complexity, the built-in encoder can be retrofitted.

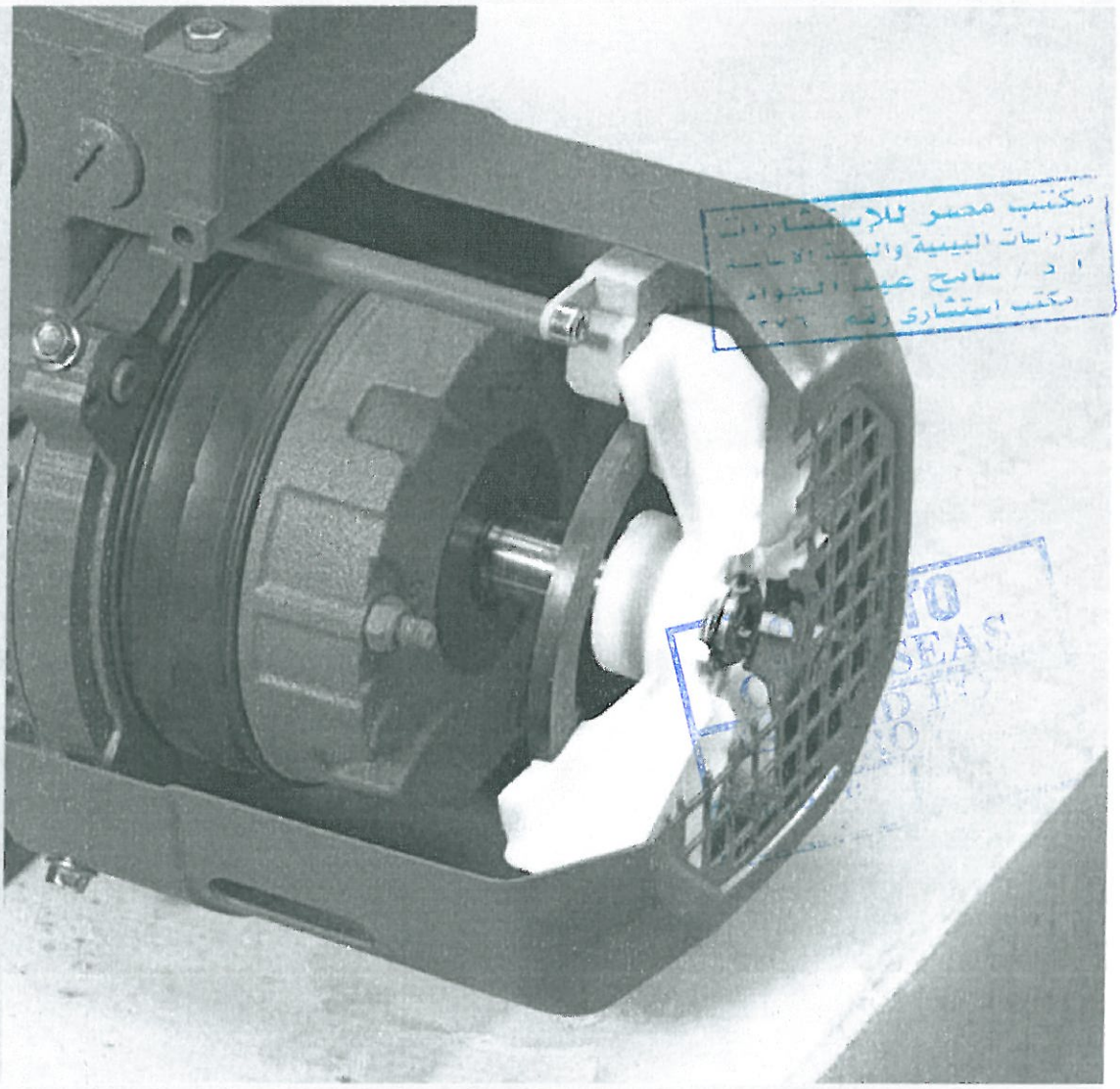

Installation flexibility also on the input end

SEW-EURODRIVE offers optimum solutions for the input end in line with the gear unit family, to provide more flexibility and efficiency also on the motor side. Input covers and motor adapters are characterized by compact dimensions, low weight and long service life. Optimum integration with our gear units improves overall efficiency of the drive system.

SEW-EURODRIVE offers eight different cover sizes for different power ratings. The options enable optimum connection of the drive components depending on the gear unit and the drive task. Take the height adjustment for covers, for example, with a height-adjustable motor mounting platform that allows for simple installation and startup. Or the integrated backstop, which ensures compact drive design and optimum operating characteristics.

The input covers and adapter variants are excellent examples to show how our gear units can provide more efficiency for any drive anywhere.

The adapters also increase the number of possibilities

In addition to the integrated torque limiting coupling, there is an adapter variant with integrated hydraulic centrifugal coupling. It is equipped with protection against overheating as standard. An integrated mechanical brake and an integrated backstop are optional. With the AM motor adapters, all IEC motors size 63 to 280 and all NEMA motors size 56 to 365 can be mounted to the 7-series gear units. The AQ adapter accepts servomotors – either with positive key connection (AQA) or with non-positive connection as clamping ring hub (AQH).

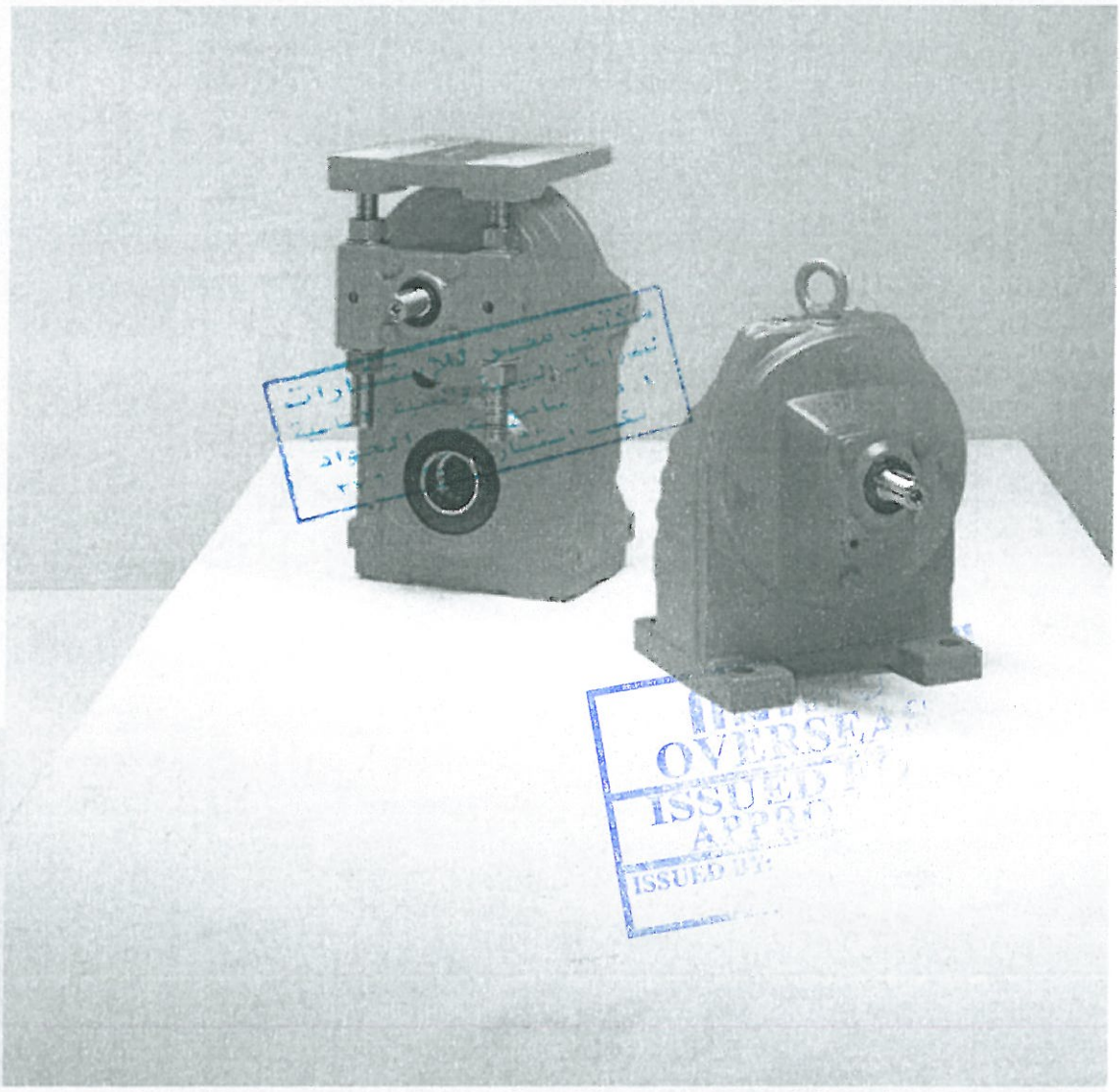

Installation does not get much easier: with the TorqLOC® hollow shaft mounting system

Simple
The new design of the TorqLOC® hollow shaft mounting system makes for simple assembly and significantly improves removal of the drive even after lengthy periods of operation.
SEW-EURODRIVE will deliver the drive with the bushing for the respective diameter. The operator will install the clamping ring on the customer shaft and the drive can be simply mounted and fixed. The installation is simple and fast because there are no interference fits that have to be overcome.
Removal will be just as simple and takes place in reverse order.

Economical
The TorqLOC® hollow shaft mounting system makes it possible to use drawn, unprocessed material up to quality level h11 for customer shafts, reducing costs even further.
No additional machining of the customer shaft is required.

Flexible
Planned down to the last detail: Up to four different rated diameters can be adapted with one gear unit size, resulting in a reduction of variants.

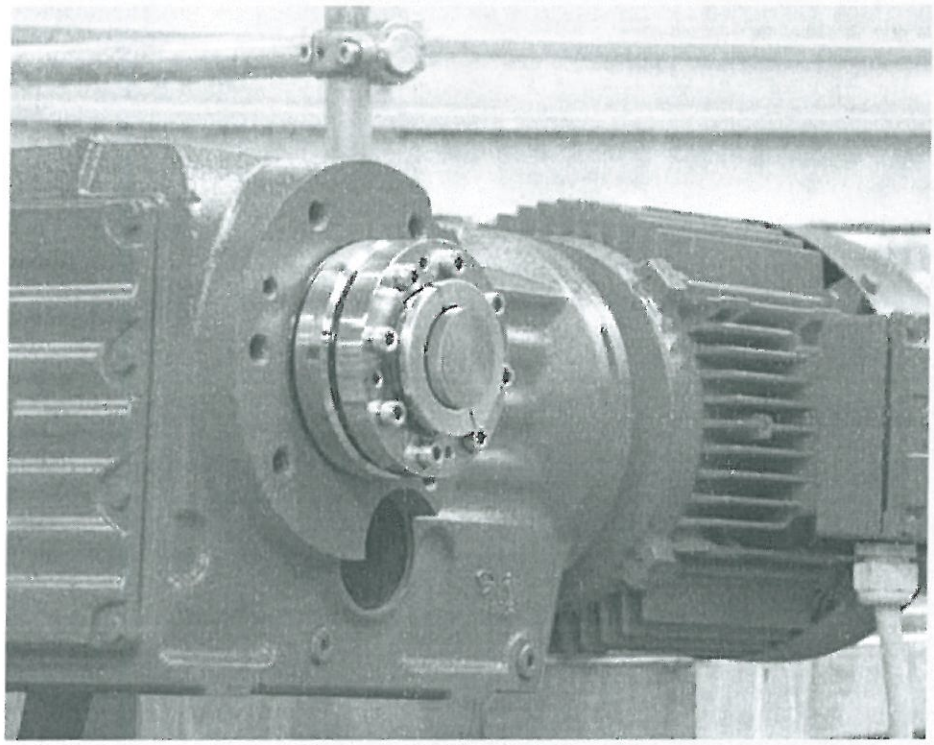

Awards

The trade journal "Plant Engineering" awarded the "Product of the Year 2002". The award is given to innovative products which lead to ground-breaking improvements at the production level.

SEW-EURODRIVE received the "Silver Award" for TorqLOC® in the category "Power Transmission". The "Silver Award" was handed out at the National Plant Engineering Show in Chicago in early March 2003.

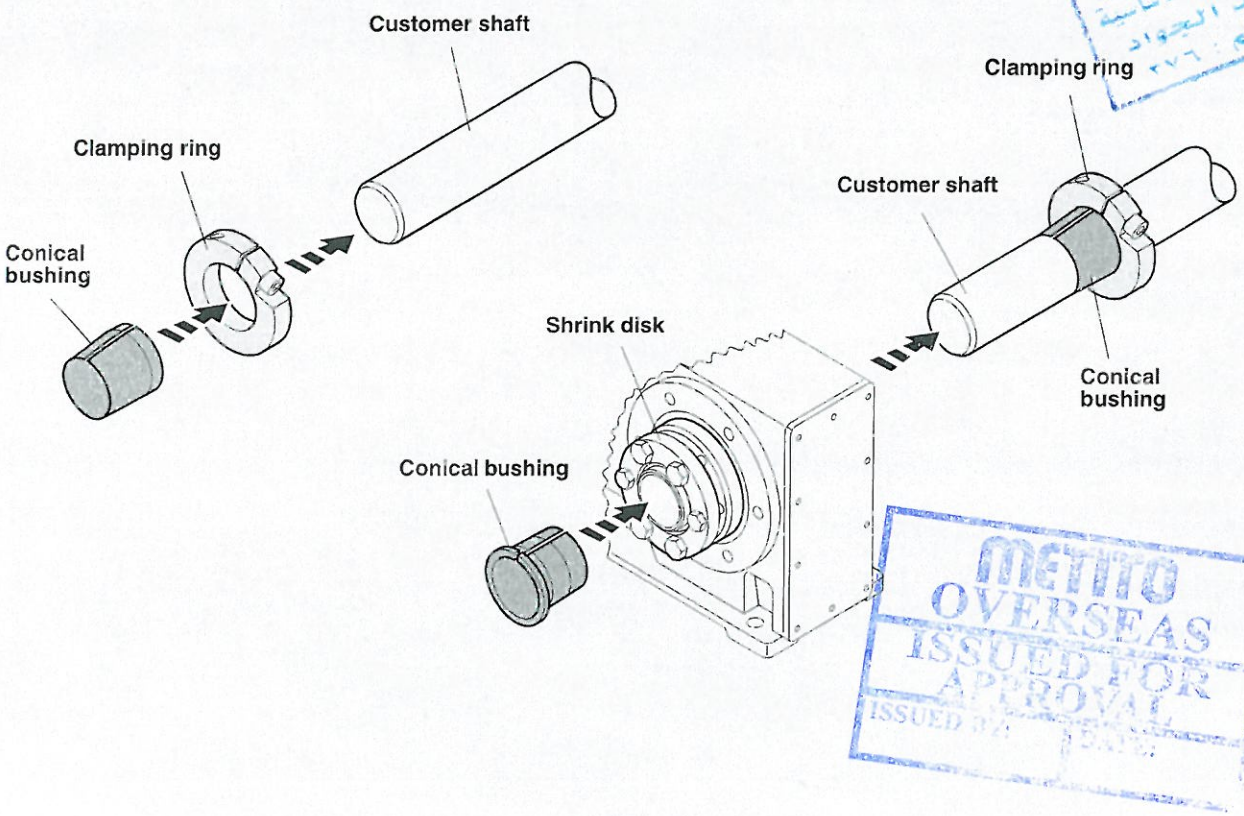

All you need is a PC to discover our range of almost unlimited possibilities

Printed documentation, CD-ROMs or downloads: As diverse as the product range of SEW-EURODRIVE are the tools supporting the designer in the planning and design phase. The comprehensive information material and the product-supporting software are fast and simple tools for selecting a drive and integrating it into the machine or system design.

Order or download from the Internet
The series of publications entitled "Drive Engineering – Practical Implementation," such as volume 1 "Project Planning for Drives," documentation for different products (Docu ROMs) and presentations (CBI-ROM) on CD-ROM, or operating instructions, manuals and catalogs offer detailed basic information.

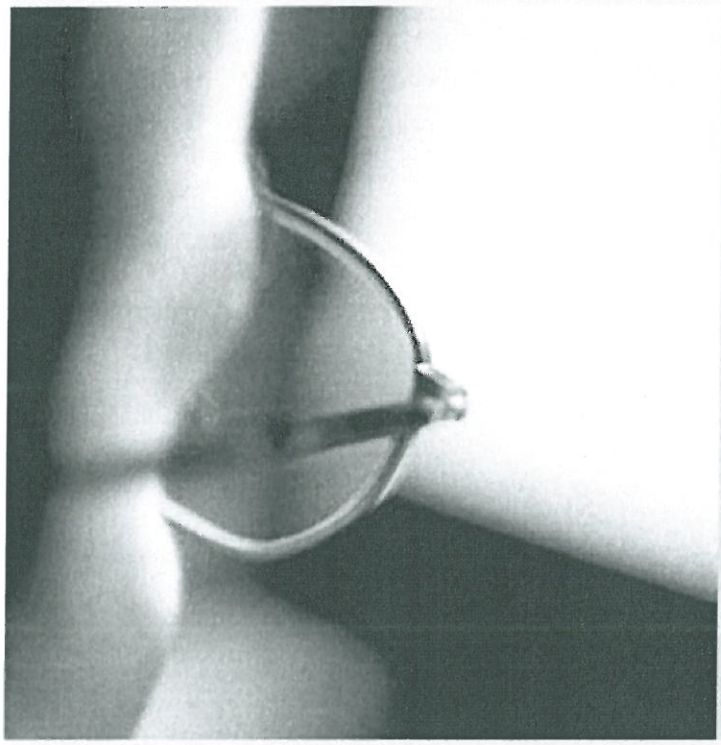

Workbench

The new SEW Workbench is a planning and configuration tool to specify SEW-EURODRIVE products. The user can employ simple graphical elements to configure even complex systems and check their functionality quickly and easily. A variety of new functions offers our customers the opportunity to find a drive solution to meet their individual requirements and discuss the results with an SEW-EURODRIVE sales representative.

The SEW Workbench offers catalog selection functions for gearmotors, electronic components and prefabricated cables as well as accessories and options.

Calculation of the CAD data ensures the creation of true-to-scale drawings of SEW-EURODRIVE products in the 2D formats DXF and DWG as well as in the 3D formats SAT, STEP, IGES, VRML, VDAFS and 3D-DXF. Thanks to the high degree of functionality, spare parts lists, mounting position sheets, dimension sheets and operating instructions are determined automatically.

To use SEW Workbench, all you need to do is register via the SEW-EURODRIVE customer portal DriveGate® once you have received the data DVD (https://portal.drivegate.biz). An Internet update service keeps the products and functions up-to-date.

The SEW Workbench is available in the following languages:
German, English, French, Dutch, Spanish, Portuguese, Russian, Czech, and Polish.

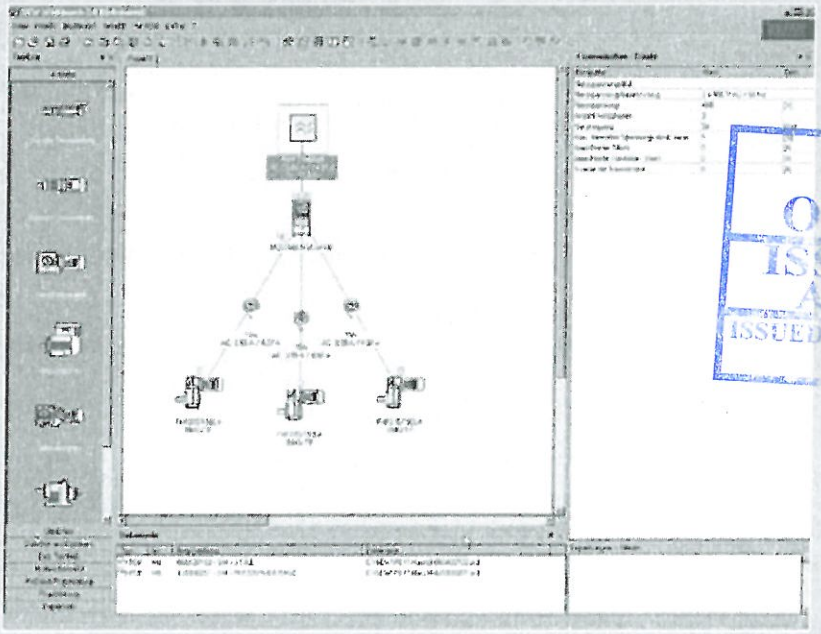

Technical data (4-pole motors)

Motors of the DR.. series / 50 Hz motor power [kW]

Motor size	Standard motors	Energy-efficient motors	
	Standard Efficiency DRS.. type	High Efficiency DRE.. type	Premium Efficiency DRP.. type
DR71	0.37 ... 0.55	–	–
DR80	0.75 ... 1.1	0.37 ... 0.75	–
DR90	1.5 ... 2.2	1.1 ... 1.5	0.75 ... 1.1
DR100	3.0 ... 4.0	2.2 ... 3.0	1.5 ... 2.2
DR112	4.0	3.0	–
DR132	5.5 ... 9.2	4.0 ... 7.5	3.0 ... 5.5
DR160	9.2 ... 15	7.5 ... 11	5.5 ... 7.5
DR180	15 ... 30	11 ... 22	7.5 ... 18.5
DR200	30	30	22
DR225	37 ... 55	37 ... 45	30 ... 37
...	...	...	...
DR315	110 ... 200	110 ... 200	90 ... 160

Motors of the DR.. series / 60 Hz motor power [kW]

Motor size	Standard motors	Energy-efficient motors	
	Standard Efficiency DRS.. type	High Efficiency DRE.. type	Premium Efficiency DRP.. type
DR71	0.37 ... 0.55	–	–
DR80	0.75 ... 1.1	0.37 ... 0.75	–
DR90	1.5 ... 2.2	1.1 ... 1.5	0.75 ... 1.5
DR100	3.0 ... 4.0	2.2 ... 3.7	–
DR112	4.0	3.7	2.2
DR132	5.5 ... 9.2	4.0 ... 7.5	3.7
DR160	9.2 ... 15	7.5 ... 11	5.5 ... 11
DR180	15 ... 30	11 ... 22	11 ... 22
DR200	30	30	22
DR225	37 ... 55	37 ... 45	22 ... 37
...	...	...	...
DR315	110 ... 225	110 ... 225	90 ... 160

Overview of brake combinations for DR.. motors

Motor size	Maximum braking torque [Nm]									
	5	10	20	55	110	200	300	600	1200	2400
DR71	BE05									
DR80		BE1								
DR90			BE2							
DR100				BE5						
DR112										
DR132					BE11					
DR160						BE20				
DR180										
DR200							BE30	BE32		
DR225										
...								...	...	
DR315									BE120	BE122

Overview of encoder combinations for DR.. motors

Motor size	Built-in encoder				Add-on encoder		
	Signal format	Signal format			Multi-turn signal format		Other
	HTL	Sin/Cos	TTL	HTL	Sin/Cos RS485	Sin/Cos M-SSI	
DR71							
DR80	EI7C						
DR90	EI76	ES7S	ES7R	ES7C	AS7W	AS7Y	
DR100	EI72						
DR112	EI71						
DR132							On request
DR160							
DR180	–	EG7S	EG7R	EG7C	AG7W	AG7Y	
DR200							
DR225							
...		...	...	...	...	...	
DR315	–	EH7Y	On request	On request	On request	AH7Y (TTL+M-SSI)	

Selection of additional features
for the modular AC motor system

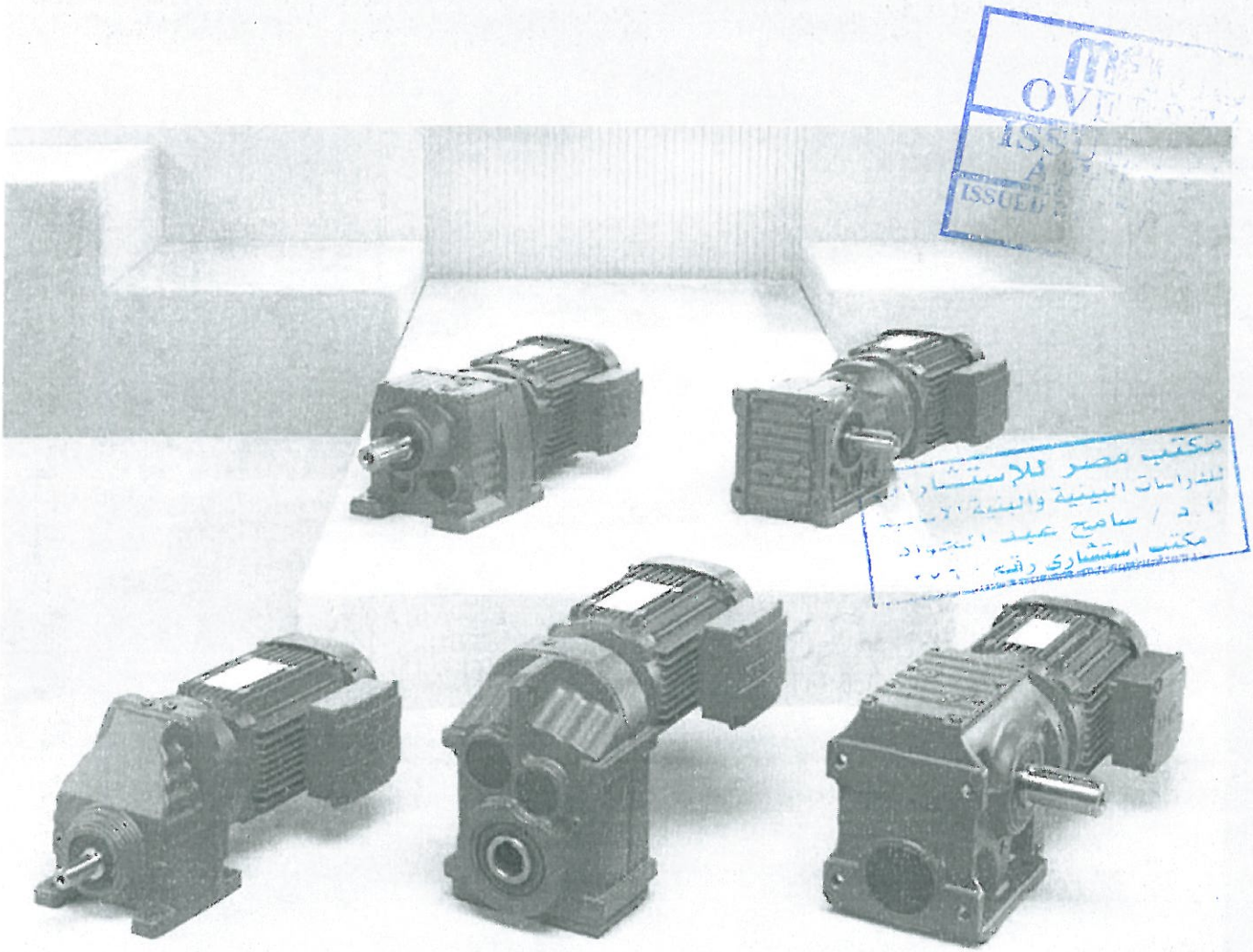

Additional feature	Characteristic	SEW type designation
Brakes		BE with size designation
Manual brake release	Automatic disengaging function (BE05-32)	HR
	Lockable (BE05-122)	HF
Brake monitoring	Wear/function	DUB
Built-in encoder (DR71 ... 132)	HTL	EI7C / EI76 / EI72 / EI71
Shaft-centered add-on encoder	Sin/Cos	ES7S / EG7S
(DR71 ... 132 / DR160 ... 225)	HTL	ES7C / EG7C
	TTL	ES7R / EG7R
	SSI	AS7Y / AG7Y
	RS-485 Multi-turn	AS7W / AG7W
Shaft-centered hollow shaft	Sin/Cos	EH7S
encoder (DR315)	SSI Multi-turn	AH7Y
Thermal motor protection	3 PTC resistors	TF
	3 bimetallic switches	TH
Temperature detection	1 or 3 x PT100	PT
	1 x KTY84-130	KY
Backstop	Instead of a brake, CW or CCW direction of rotation blocked	RS
Plug connectors	Integrated in terminal box	IS
	Mounted on (types from Harting)	AC.. / AS.. / AM..
Forced cooling fan		V
Canopy		C
Air filter		LF
Fan	Reduction of the noise level	LN
	Metal	AL
	Heavy (additional inertia)	Z
Condensation drain holes		DH
2nd shaft end		2W
MOVIMOT® (DR71 ... 132)		MM with size designation
MOVI-SWITCH® (DR71 ... 100)		MSW

1930 4013 / 1014

SEW-EURODRIVE is right there for you:

Argentina
Tel. +54 3327 4572-84
Fax +54 3327 4572-21
sewar@sew-eurodrive.com.ar

Australia
Tel. +61 3 9933-1000
Fax +61 3 9933-1003
enquires@sew-eurodrive.com.au

Austria
Tel. +43 1 617 55 00-0
Fax +43 1 617 55 00-30
sew@sew-eurodrive.at

Belarus
Tel. +375 17 298 47 56
Fax +375 17 298 47 54
sales@sew.by

Belgium
Tel. +32 16 386-311
Fax +32 16 386-336
info@sew-eurodrive.be

Brazil
Tel. +55 19 3835-8000
sew@sew.com.br

Canada
Tel. +1 905 791-1553
Fax +1 905 791-2999
marketing@sew-eurodrive.ca

Chile
Tel. +56 2 2757 7000
Fax +56 2 2757 7001
ventas@sew-eurodrive.cl

China
Tel. +86 22 25322612
Fax +86 22 25323273
info@sew-eurodrive.cn

Colombia
Tel. +57 1 54750-50
Fax +57 1 54750-44
sew@sew-eurodrive.com.co

Czech Republic
Tel. +420 255 709 601
Fax +420 235 350 613
sew@sew-eurodrive.cz

Denmark
Tel. +45 43 9585-00
Fax +45 43 9585-09
sew@sew-eurodrive.dk

Finland
Tel. +358 201 589-300
Fax +358 3 7806-211
sew@sew.fi

France
Tel. +33 3 88 73 67 00
Fax +33 3 88 73 66 00
sew@usocome.com

Great Britain
Tel. +44 1924 893-855
Fax +44 1924 893-702
info@sew-eurodrive.co.uk

Hong Kong
Tel. +852 36902200
Fax +852 36902211
contact@sew-eurodrive.hk

Hungary
Tel. +36 1 437 06-58
Fax +36 1 437 06-50
office@sew-eurodrive.hu

India
Tel. +91 265 3045200
Fax +91 265 3045300
marketing@seweurodriveindia.com

Italy
Tel. +39 02 96 9801
Fax +39 02 96 980 999
sewit@sew-eurodrive.it

Ivory Coast
Tel. +225 21 21 81 05
Fax +225 21 25 30 47
info@sew-eurodrive.ci

Japan
Tel. +81 538 373811
Fax +81 538 373814
sewjapan@sew-eurodrive.co.jp

Kazakhstan
Tel. +7 727 238 1404
Fax +7 727 243 2696
sew@sew-eurodrive.kz

Malaysia
Tel. +60 7 3549409
Fax +60 7 3541404
sales@sew-eurodrive.com.my

Mexico
Tel. +52 442 1030-300
Fax +52 442 1030-301
scmexico@seweurodrive.com.mx

Mongolia
Tel. +976 77109997
Fax +976 77109997
sew@sew-eurodrive.mn

Morocco
Tel. +212 523 32 27 80/81
Fax +212 523 32 27 89
sew@sew-eurodrive.ma

Netherlands
Tel. +31 10 4463-700
Fax +31 10 4155-552
info@sew-eurodrive.nl

New Zealand
Tel. +64 9 2745627
Fax +64 9 2740165
sales@sew-eurodrive.co.nz

Norway
Tel. +47 69 241-020
Fax +47 69 241-040
sew@sew-eurodrive.no

Paraguay
Tel. +595 991 519695
Fax +595 21 3285539
sewpy@sew-eurodrive.com.py

Peru
Tel. +51 1 3495280
Fax +51 1 3493002
sewperu@sew-eurodrive.com.pe

Poland
Tel. +48 42 676 53 00
Fax +48 42 676 53 49
sew@sew-eurodrive.pl

Portugal
Tel. +351 231 20 9670
Fax +351 231 20 3685
infosew@sew-eurodrive.pt

Russia
Tel. +7 812 3332522
Fax +7 812 3332523
sew@sew-eurodrive.ru

Singapore
Tel. +65 68621701
Fax +65 68612827
sewsingapore@sew-eurodrive.com

Slovakia
Tel. +421 2 33595 202
Fax +421 2 33595 200
sew@sew-eurodrive.sk

South Africa
Tel. +27 11 248 7000
Fax +27 11 248 7289
info@sew.co.za

South Korea
Tel. +82 31 492-8051
Fax +82 31 492-8056
master.korea@sew-eurodrive.com

Spain
Tel. +34 94 4318470
Fax +34 94 4318471
sew.spain@sew-eurodrive.es

Sweden
Tel. +46 36 3442 00
Fax +46 36 3442 80
info@sew-eurodrive.se

Switzerland
Tel. +41 61 41717-17
Fax +41 61 41717-00
info@imhof-sew.ch

Tanzania
Tel. +255 22 277 5780
Fax +255 22 277 5788
uroos@sew.co.tz

Thailand
Tel. +66 38 454281
Fax +66 38 454288
sewthailand@sew-eurodrive.com

Turkey
Tel. +90 262 999 1000-04
Fax +90 262 999 1009
sew@sew-eurodrive.com.tr

Ukraine
Tel. +380 56 370 3211
Fax +380 56 372 2078
sew@sew-eurodrive.ua

Uruguay
Tel. +598 2 2118189
Fax +598 2 2118190
sewuy@sew-eurodrive.com.uy

USA
Tel. +1 864 439-7537
Fax +1 864 439-7830
cslyman@seweurodrive.com

Venezuela
Tel. +58 241 832-9804
Fax +58 241 838-6275
ventas@sew-eurodrive.com.ve

How we're driving the world

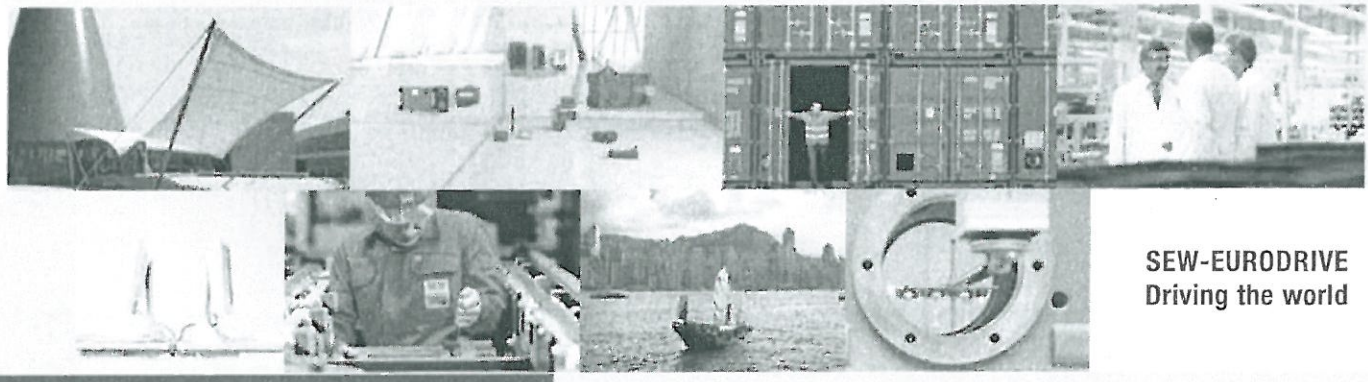

SEW-EURODRIVE
Driving the world

Fast. Up-to-date. Online: www.driveworld.de/en

SEW EURODRIVE
SEW-EURODRIVE GmbH & Co KG
P.O. Box 30 23
76642 Bruchsal/Germany
Tel. +49 7251 75-0
Fax +49 7251 75-1970
sew@sew-eurodrive.com
→ www.sew-eurodrive.com

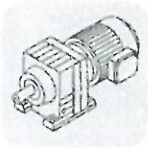

R..DRS
R..DRS [mm]

01 101 00 06

RF27..

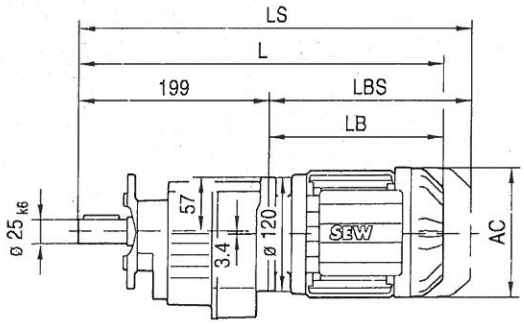

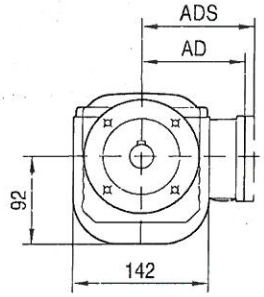

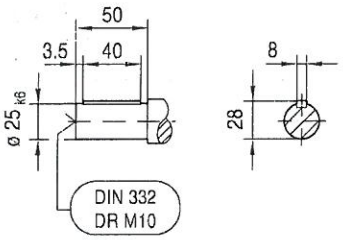

ø 120

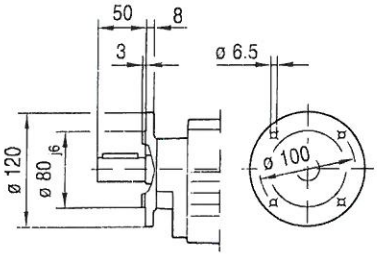

ø 140

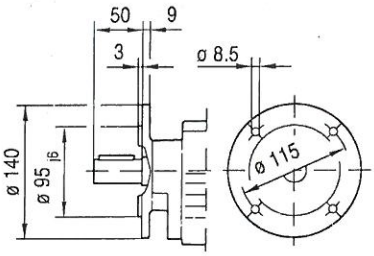

ø 160

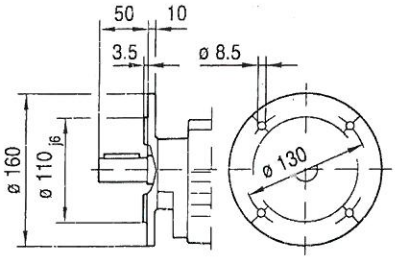

(→ 📖 131)	DR63..	DR71S	DR71M	DR80S	DR80M	DR90M	DR90L	DR100M
AC	132	139	139	156	156	179	179	197
AD	105	119	119	128	128	140	140	157
ADS	105	129	129	139	139	150	150	158
L	390	402	427	436	467	471	491	521
LS	445	470	495	517	548	564	584	614
LB	191	203	228	237	268	272	292	322
LBS	246	271	296	318	349	365	385	415

4.21 Safety Showers

Körper- und Augendusch-Kombination
Body- and eye wash combination shower

Modell 2.515-A
Körper- und Augendusch-Kombination nach DIN 12899 Teil 3 zur freien Aufstellung.
Großer Duschkopf (Ø 250 mm) aus Edelstahl.
Strahlscheibe mit großen Bohrungen, gegen Verkalken geschützt.
Schnellöffnendes Spezial-Zugstangenventil mit vollem Durchgang, nicht selbsttätig schließend.
Große Bodenplatte zur Fußbodenbefestigung.
Augendusche mit Auffangbecken (Ø 250 mm) aus Edelstahl.
Betätigung über schnell öffnendes Spezial-Druckplattenventil aus Messing, nicht selbsttätig schließend.
2 Augensprühdüsen mit Strahlreglern nach DIN EN 246 in diebstahlhemmenden Verschraubungen mit Mengenregulierung, Staubschutzkappen.
Getrennte Anschlüsse für Zu- und Ablauf.

Inkl. Hinweisschild „Notdusche" und „Augendusche" als selbstklebende Folie.

Artikelnummer: 12515001

Technische Daten

Anschluss:	Rp 1-1/4"
Anschluss Ablauf:	Rp 1-1/4"
Mindestfließdruck:	2 bar
Volumenstrom:	Körperdusche 120 l/min
	Augendusche 20 l/min
Rohrleitung und Fittings:	feuerverzinkt
Armaturen:	Messing vernickelt

Model 2.515-A
Safety shower combination for industry
Big showerhead (Ø 250 mm) made of stainless steel.
Flow plate with large drillings, protected against calcifying.
Activated with a 1" stay-open ball valve operated by a stainless steel pull rod.
Eye wash (Model 1.502-AM) is supplied with a stay open full flow ball valve. Valve made of chrome plated brass with extended spindle, activated by a push handle.
It features twin spray heads with individual flow regulator in an anti-theft protected screwing with dust covers.
Pipes made of galvanized steel.
Compliance: DIN EN 15154-1 and 2 / ANSI Z358.1

Part number: 12515001

Technical Details

Flow rate:	safety shower 120l/min
	eye wash 20l/min
Connection:	Rp 1-1/4"

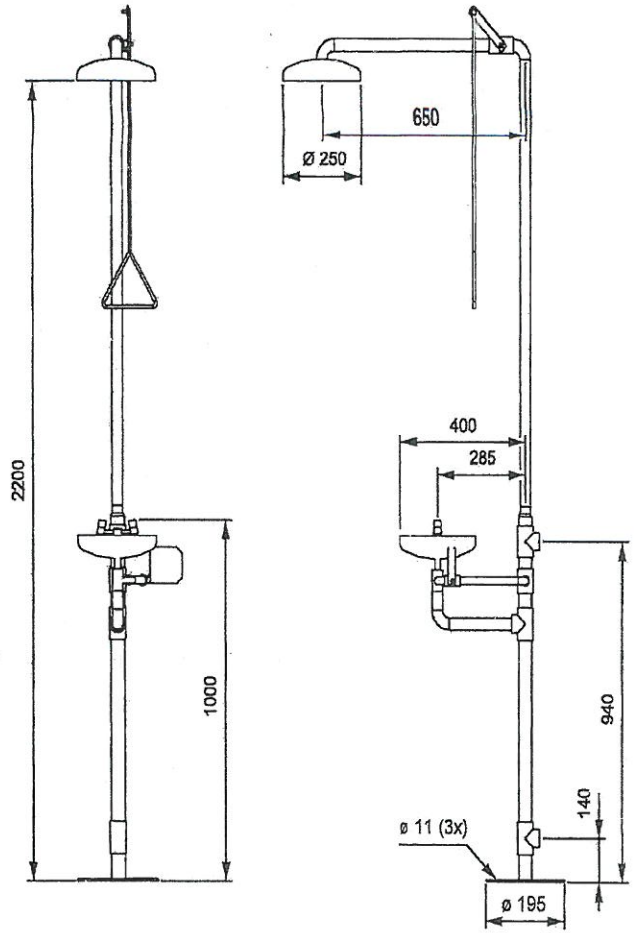

MATERIAL:	1	LAE4918	07-Jun-10
TITLE: Notdusche / Safety shower	ISSUE	CHANGE No.	DATE
	SCALE:	DR'N: CB	CH'K:
	RELEASED:	ENG: CB	PROD/ SALES:
	NUMBER:	AAE5512	

EVOQUA WATER TECHNOLOGIES
Evoqua Water Technologies GmbH

FIRST ANGLE PROJECTION	DIMENSIONS IN mm		DESIGN CENTRE: GER		SHEET 1 OF 1
REF: WAE6828		ISS: 1	TOLERANCES TO ISO 2768 - m	A3	© 2006
ISS: LAE	ISS: LAE	ISS: LAE	ISS: LAE	ISS: LAE	